GE 7000 - 7500 BS/GS
GE 6000 - 6500
DS-DES/GS

0 9 0 4 *256709003 - GB*

ENGLISH

15/01/04 25670M00

preparato da UPT
approvato da DITE

IQNet

THE INTERNATIONAL CERTIFICATION NETWORK

CERTIFICATE

IQNet and its partner
CISQ/ICIM
hereby certify that the organization

MOSA Divisione della BCS S.p.A.

Viale Europa, 59
I-20090 CUSAGO (MI)

for the following field of activities

Design, production and servicing of engine driven welders and generating sets.

has implemented and maintains a

Quality Management System

which fulfills the requirements of the following standard

ISO 9001:2000

Issued on: **2003-03-06**
Validity date: **2006-03-05**
Registration Number: IT-3722

Fabio Roversi
President of IQNet

Giancarlo Prisi
President of CISQ

ICIM

CERTIFICATO n. / *CERTIFICATE No.* 0192/3

SI CERTIFICA CHE IL SISTEMA DI GESTIONE PER LA QUALITÀ DI
WE HEREBY CERTIFY THAT THE QUALITY MANAGEMENT SYSTEM OPERATED BY

MOSA Divisione della BCS S.p.A.

UNITÀ OPERATIVE
OPERATIVE UNITS

Viale Europa, 59 - 20090 Cusago (MI)
Italia

È CONFORME ALLA NORMA
IS IN COMPLIANCE WITH THE STANDARD

UNI EN ISO 9001:2000

PER LE SEGUENTI ATTIVITÀ
FOR THE FOLLOWING ACTIVITIES

EA: 18

Progettazione, produzione ed assistenza di motosaldatrici e gruppi elettrogeni
Design, production and servicing of engine driven welders and generating sets.

Data emissione / *First issue* 30/05/1994
Emissione corrente / *Current issue* 06/03/2002
Data di scadenza / *Expiring date* 05/03/2006

ICIM S.p.A. - PIAZZA A. DIAZ, 7 - 20123 MILANO

SINCERT

CISQ

UNI EN ISO 9001 : 2000

ISO 9001:2000 - Cert. 0192/3

MOSA has certified its quality system according to UNI EN ISO 9001:2000 to ensure a constant, high quality of its products. This certification covers the design, production and servicing of engine driven welders and generating sets.

The certifying institute, ICIM, which is a member of the International Certification Network IQNet, awarded the official approval to MOSA after an examination of its operations at the head office and plant in Cusago (MI), Italy.

This certification is not a point of arrival but a pledge on the part of the entire company to maintain a level of quality of both its products and services which will continue to satisfy the needs of its clients, as well as to improve the transparency and the communications regarding all the company's actives in accordance with the official procedures and in harmony with the MOSA Manual of Quality.

The advantages for MOSA clients are:

- Constant quality of products and services at the high level which the client expects;
- Continuous efforts to improve the products and their performance at competitive conditions;
- Competent support in the solution of problems;
- Information and training in the correct application and use of the products to assure the security of the operator and protect the environment;
- Regular inspections by ICIM to confirm that the requirements of the company's quality system and ISO 9001 are being respected.

All these advantages are guaranteed by the CERTIFICATE OF QUALITY SYSTEM No.0192/3 issued by ICIM S.p.A. - Milano (Italy) - www.icim.it

INDEX (for all MOSA models)

M 01	QUALITY SYSTEM	
M 1.01	COPYRIGHT	
M 1.1	NOTES	
M 1.4	NOTES	
M 2- ...	SYMBOLS AND SAFETY PRECAUTIONS	
M 2.3	ABBREVIATIONS LEGEND	
M 2.4	SYMBOLS	
M 2.5...	INSTALLATION AND ADVICE BEFORE USE	
M 2.6	INSTALLATIONS AND ADVICE	
M 2.7	INSTALLATION	
M 3	PACKING	
M 4	TRANSPORT AND DISPLACEMENTS	
M 6	ASSEMBLY: CT.....	
M 20	SETTING-UP THE UNIT (DIESEL ENGINE)	
M 21	ENGINE STARTING AND USE (DIESEL ENGINE)	
M 22	STOPPING THE ENGINE (DIESEL ENGINE)	
M 25	SETTING-UP THE UNIT (GASOLINE ENGINE)	
M 26	STARTING THE ENGINE (GASOLINE ENGINE)	
M 27	STOPPING THE ENGINE (GASOLINE ENGINE)	
M 30	CONTROLS LEGEND	
M 31	CONTROLS	
M 32	CONTROLS (FRONT PANEL)	
M 33	USE AS HYDRAULIC POWER TAKE-OFF	only for TS
M 34	USE AS A WELDER	only for TS
M 35	USE AS AN ENGINE STARTER	only for TS
M 36	USE AS A BATTERY CHARGE	
M 37	USE AS A GENERATOR	
M 38	USE OF THE REMOTE CONTROL	
M 39	USE OF THE ENGINE PROTECTION	
M 40	TROUBLE SHOOTING	
M 43	MAINTENANCE	
M 44	PERIODIC MAINTENANCE	
M 45	STORAGE	
M 46	CAST OFF	
M 51	TECHNICAL DATA	
M 52	TECHNICAL DATA ENGINE DRIVEN WELDER	only for TS
M 53	DIMENSIONS	
M 55	RECOMMENDED ELECTRODES	only for TS
M 60	ELECTRICAL SYSTEM LEGENDE	
M 61	ELECTRICAL SYSTEM	
M 65	HYDRAULIC SYSTEM	
R 1	SPARE PARTS LIST	
.....	SPARE PARTS	
K...	ACCESSORIES	

⚠ ATTENTION

This use and maintenance manual is an important part of the machines in question.
The assistance and maintenance personel must keep said manual at disposal, as well as that for the engine and alternator (if the machine is synchronous) and all other documentation about the machine.

We advise you to pay attention to the pages concerning the security (see page M1.1).

MOSA

© All rights are reserved to said Company.

It is a property logo of MOSA division of B.C.S. S.p.A. All other possible logos contained in the documentation are registered by the respective owners.

➠ The reproduction and total or partial use, in any form and/or with any means, of the documentation is allowed to nobody without a written permission by MOSA division of B.C.S. S.p.A.

To this aim is reminded the protection of the author's right and the rights connected to the creation and design for communication, as provided by the laws in force in the matter.

In no case MOSA division of B.C.S. S.p.A. will be held responsible for any damaga, direct or indirect, in relation with the use of the given information.

MOSA division of B.C.S. S.p.A. does not take any responsibility about the shown information on firms or individuals, but keeps the right to refuse services or information publication which it judges discutible, unright or illegal.

INFORMATION

Dear Customer,
We wish to thank you for having bought from MOSA a high quality set.

Our sections for Technical Service and Spare Parts will work at best to help you if it were necessary.

To this purpose we advise you, for all control and overhaul operations, to turn to the nearest authorized Service Centre, where you will obtain a prompt and specialized intervention.

☞ In case you do not profit on these Services and some parts are replaced, please ask and be sure that are used exclusively original MOSA parts; this to guarantee that the performances and the initial safety prescribed by the norms in force are re-established.

☞ *The use of **non original spare parts will cancel immediately** any guarantee and Technical Service obligation from MOSA.*

NOTES ABOUT THE MANUAL

Before actioning the machine please read this manual attentively. Follow the instructions contained in it, in this way you will avoid inconveniences due to negligence, mistakes or incorrect maintenance. The manual is for qualified personnel, who knows the rules: about safety and health, installation and use of sets movable as well as fixed.

You must remember that, in case you have difficulties for use or installation or others, our Technical Service is always at your disposal for explanations or interventions.

The manual for Use Maintenance and Spare Parts is an integrant part of the product. It must be kept with care during all the life of the product.
In case the machine and/or the set should be yielded to another user, this manual must also given to him.
Do not damage it, do not take parts away, do not tear pages and keep it in places protected from dampness and heat.

You must take into account that some figures contained in it want only to identify the described parts and therefore might not correspond to the machine in your possession.

INFORMATION OF GENERAL TYPE

In the envelope given together with the machine and/or set you will find: the manual for Use Maintenance and Spare Parts, the manual for use of the engine and the tools (if included in the equipment), the guarantee (in the countries where it is prescribed by law).

Our products have been designed for the use of generation for welding, electric and hydraulic system; ANY OTHER DIFFERENT USE NOT INCLUDED IN THE ONE INDICATED, relieves MOSA from the risks which could happen or, anyway, from that which was agreed when selling the machine; MOSA excludes any responsibility for damages to the machine, to the things or to persons in this case.

Our products are made in conformity with the safety norms in force, for which it is advisable to use all these devices or information so that the use does not bring damage to persons or things.

While working it is advisable to keep to the personal safety norms in force in the countries to which the product is destined (clothing, work tools, etc.).

Do not modify for any motive parts of the machine (fastenings, holes, electric or mechanical devices, others..) if not duly authorized in writing by MOSA: the responsibility coming from any potential intervention will fall on the executioner as in fact he becomes maker of the machine.

☞ ***Notice:** this manual does not engage MOSA, who keeps the faculty, apart the essential characteristics of the model here described and illustrated, to bring betterments and modifications to parts and accessories, without putting this manual uptodate immediately.*

Tel.: 02 - 90352.1
Fax: 02 - 90390466
e-mail : info@mosa.it
www.mosa.it

MOSA
Divisione della BCS S.p.A.
V.le Europa 59 - 20090 Cusago (Mi) - Italia

ICIM ISO 9001:2000 - Cert. 0192/3

DICHIARAZIONE DI CONFORMITA'

CE

Déclaration de Conformité – Declaration of Conformity – Konformitätserklärung
Conformiteitsverklaring – Declaración de Conformidad

MOSA dichiara sotto la propria responsabilità che la macchina:
MOSA déclare, sous sa propre responsabilité, que la machine:
MOSA declares, under its own responsibility, that the machine:
MOSA erklärt, daß die Aggregate:
MOSA verklaard, onder haar eigen verantwoordelijkheid, dat de machine:
MOSA declara bajo su responsabilidad que la máquina:

Modello/Modèle/Model/Modell/Model/Modelo: _____

Codice/ Code/ Code/ Kode/ Code/ Codigo: _____

è conforme con quanto previsto dalle **Direttive Comunitarie** e relative modifiche:
est en conformité avec ce qui est prévu par les **Directives Communautaires** et relatives modifications:
conforms with the **Community Directives** and related modifications:
mit den Vorschriften der Gemeinschaft und deren Ergänzungen übereinstimmt:
in overeenkomst is met de inhoud van gemeenschapsrichtlijnemen gerelateerde modificaties:
comple con los requisitos de la **Directiva Comunitaria** y sus anexos:

98/37/CE - 73/23/CE - 89/336/CE - 2000/14/CE

per la verifica sono state considerate le seguenti norme armonizzate, Norme nazionali e internazionali:
pour la vérification de la conformité ont été consultées les normes harmonisées suivantes, normes nationales et internationales:
to check the conformity, the following harmonized norms, national and international norms, have been consulted:
zur Prüfung hat man die folgenden übereinstimmenden nationalen und internationalen Normen herangezogen:
ter verificatie van de overeenkomst, zijn de volgende geharmoniseerde normen, nationaal en internationaal, geconsulteerd:
para su verification se han tenido en cuenta las Normas armonizadas, Normas nacionales e internacionales:

Norme armonizzate - normes harmonisées - harmonized norms - übereinstimmende Normen geharmoniseerde normen - Normas armonizadas:
EN 292-1 EN 292-2
EN 60204-1
EN 50199 EN 60974-1 (Solo per modelli - Seulement pour les modèles - Only for models - nur für die Modelle - Alleen voor de modellen - Sólo para modelos: **TS**)
EN 50081-2 EN 50082-2

Altre norme - autres normes - other norms - andere Normen - andere normen - otras normas:
ISO 8528 (Solo per modelli - Seulement pour les modèles - Only for models - nur für die Modelle - Alleen voor de modellen - Sólo para modelos: **GE**)

Ing. Benso Marelli
Direttore Generale

Cusago, _____

MM 065.2.doc

CE The CE mark (European Community) certifies that the product complies with the essential safety requirements provided by the applicable COMMUNITY DIRECTIVES. In the Conformity Declaration are reported the HARMONIZED NORMS and not, used for the checking.

SYMBOLS IN THIS MANUAL

- The symbols used in this manual are designed to call your attention to important aspects of the operation of the machine as well as potential hazards and dangers for persons and things.

IMPORTANT ADVICE

- Advice to the User about the safety:

☞ N.B.: The information contained in the manual can be changed without notice.
Potential damages caused in relation to the use of these instructions will not be considered because these are only indicative.
Remember that the non observance of the indications reported by us might cause damage to persons or things.
It is understood, that local dispositions and/or laws must be respected.

WARNING

⚠ **Situations of danger - no harm to persons or things**

Do not use without protective devices provided
Removing or disabling protective devices on the machine is prohibited.

Do not use the machine if it is not in good technical condition
The machine must be in good working order before being used. Defects, especially those which regard the safety of the machine, must be repaired before using the machine.

SAFETY PRECAUTIONS

⚠ **DANGEROUS**

This heading warns of an immediate danger for persons as well for things. Not following the advice can result in serious injury or death.

⚠ **WARNING**

This heading warns of situations which could result in injury for persons or damage to things.

⚠ **CAUTION**

To this advice can appear a danger for persons as well as for things, for which can appear situations bringing material damage to things.

⚠ **IMPORTANT**

⚠ **NOTE**

⚠ **ATTENTION**

These headings refer to information which will assis you in the correct use of the machine and/or accessories.

SYMBOLS (for all MOSA models)

STOP - Read absolutely and be duly attentive

Read and pay due attention

GENERAL ADVICE - If the advice is not respected damage can happen to persons or things.

HIGH VOLTAGE -Attention High Voltage.There can be parts in voltage, dangerous to touch. The non observance of the advice implies life danger.

FIRE - Danger of flame or fire. If the advice is not respected fires can happen.

HEAT - Hot surfaces. If the advice is not respected burns or damage to things can be caused.

EXPLOSION - Explosive material or danger of explosion. in general. If the advice is not respected there can be explosions.

WATER - Danger of shortcircuit. If the advice is not respected fires or damage to persons can be caused.

SMOKING - The cigarette can cause fire or explosion. If the advice is not respected fires or explosions can be caused.

ACIDS - Danger of corrosion. If the advice is not respected the acids can cause corrosions with damage to persons or things.

WRENCH - Use of the tools. If the advice is not respected damage can be caused to things and even to persons.

PRESSION - Danger of burns caused by the expulsion of hot liquids under pressure.

ACCES FORBIDDEN *to non authorizad* peaple.

PROHIBITIONS No harm for persons

Use only with safety clothing -
It is compulsory to use the personal protection means given in equipment.

Use only with safety clothing -
It is compulsory to use the personal protection means given in equipment.

Use only with safety protections -
It is a must to use protection means suitable for the different welding works.

Use with only safety material -
It is prohibited to use water to quench fires on the electric machines.

Use only with non inserted voltage -
It is prohibited to make interventions before having disinserted the voltage.

No smoking -
It is prohibited to smoke while filling the tank with fuel.

No welding -
It is forbidden to weld in rooms containing explosive gases.

ADVICE <u>No harm for persons and things</u>

Use only with safety tools, adapted to the specific use -
It is advisable to use tools adapted to the various maintenance works.

Use only with safety protections, specifically suitable
It is advisable to use protections suitable for the different welding works.

Use only with safety protections -
It is advisable to use protections suitable for the different daily checking works.

Use only with safety protections -
It is advisable to use all protections while shifting the machine.

Use only with safety protections -
It is advisable to use protections suitable for the different daily checking works.and/or of maintenance.

°C: temperature Celsius grades
10:10 kVA synchronous (wording example)
10000:10 kVA asynchronous (wording example)
A: Ampere
A: ADIM engine
atm: pressure
B: pretrol
BAT: battery
BC: base current
C.A.(c.a.): alternating current
C.B.: battery charger
C.C.(c.c.): direct current
cc: cm^3 (volume)
CE: European norm conformity
CF: special for pipe welding
CTL: slow touring trolley
CTM CTV: fast touring trolley: hand touring trolley
D: diesel
D: GFI
D: Deutz engine
E: electric start
EAS: automatic intervention panel for generating sets for connection to the mains
EL: electronic regulation, allows to use welder and generating set simultaneausly
EP1: automatic accelerator according to requestedpower, engine protection, low oil pressure, high temperature with engine stop, troble warning lights
EP2: engine protection, low oil pressure, hight temperature with engine stop, trouble warning lights
EP4: engine protection, low oil pressure, high temperature with engine stop, no battery charge, belt broken, low fuel level with engine stop, trouble warning lights
EP5: engine protection, low oil pressure, high temperature with engine stop, no battery charge, belt broken, low fuel level with engine stop, everspeed, trouble warning lights
ES: oil/temperature engine protection device
EV: electrovalve
g/kwh: grams/kilowatt hour (engine consumption)
GA: asynchronous alternator
GE: generating set
GHF: high frequency alternator
GS: synchronous alternator
h: hour meter (symbol)
H: Hatz engine
H: Honda engine
HI: hydraulic central
Hz: frequency
I: single-phase auxiliary generation (symbol 1~)
IP: protection grads for electric devices against acess to dangerous parts according to the IEC 529 norm (Internal Protection)
kg: kilogram (mass)
K: welding cables set
kVA: kilovolt ampere
kW: kilowatt (engine power)
kWh: kilowatt hour (energy)
l: liters (capacity)
L: Lombardini engine
Lwa: maximum acoustic (power level) according to the regulations in force
mm: millimeter (length) (measure)
m: meter (length)
mA: milliampere
MS-MSG: MOSA engine driven welder with high frequency alternator
MT: magnetothermic switch
MT: grounding kit
MTD: magnetothermic switch / GFI
OH: heater (engine oil) for generating sets
P: plus
PAC: power electric frame
PAR: device for double
PB: battery holder
PL: „pipe line" welding
PS: exhaust pipe extension
PW: welder for polyethylene and propylene pipes
QEA: automatic electric panel
QEM: manual electric panel
R: Ruggerini engine
RVT: voltage electronic regulator
S: symbol of EN 60974-1
S: Suzuki mengineotore
SKID: unit assembled on a base with no protection (no fairing)
S-SC: silenced (faired) - silenced compact (faired
SX-SXC: supersilenced (faired and sound prof) - supersilenced compact (faired and super sound prof)
T: thermic switch
TC-TCM-TCPL: remote control
TS: welder with asynchronous alternator
V: Volt
Y: Yanmar engine
Y: three-phase auxiliary generation (symbol 3~)

	Conformity CE	EEC Sound power conformity	EN 60974-1 conformity	Triphase 3 ~	Singlephase 1 ~	Users' manual	Information	Various news

Equipment and optional

Engine	Gasoline engine	Diesel engine	Air cooling	Water cooling	Manual recoil	Electric start	Battery 12 V			
Engine protection	EV Engine protection	ES Engine protection	EP2 Engine protection	EP1 Engine protection	EP4 Engine protection	EP5 Engine protection	Siren	Engine shut down (oil)	Engine speed	
Engine alarms	Oil level indicator	Battery charger indicator	Fuel level gauge/low fuel	Low fuel indicator	Oil temperature	Warning light for preheating glow plugs	Air filter blockage	Belt breakage	Over speed	Control unit QEA
Generation	GA Asynchronous alternator	GS Synchronous alternator	GHF Generator high frequency	V Voltmeter	Hz Frequency-meter	A Ammeter	Compound	V Voltmeter phase selector	RVT Electronic Voltage regulator	Switch
Electric protection	MTD Circuit breaker/ Ground fault interrupter	MT Circuit breaker	D Ground fault interrupter	T Thermal shut off	Fuse	R< Isolation monitoring				
Generation use	Terminal strip	3~ CEE Socket 400/230V EEC	1~ CEE Socket 230/110/48V EEC	1~ Schuko Socket 230V Schuko	Socket 48V EEC	Battery charger	Engine booster			
Welding control	Arc control	Welding with covered electrode	Welding current electr. regulation	Base current diode bridge	Polarity inverter	CC/CV selector				
Various devices	h Hour counter	Ready for TC	Ground connection point	Emergency stop button	Central lifting eye					
Various	Standard equipment	Options on request				D.C.	~ A.C.	+ Plus	- Minus	Maintenance Time
Optionals	Trolley	Site tow	Welding cables	Remote control						

⚠ The installation and the general advice concerning the operations, are finalized to the correct use of the machine, in the place where it is used as generator group and/or welder.

ENGINE	CHECKING BOARD
Stop engine when fueling	Do not touch electric devices if you are barefoot or with wet clothes.
Do not smoke, avoid flames, sparks or electric tools when fueling.	Always keep off leaning surfaces during work operations
Unscrew the cap slowly to let out the fuel vapours.	Static electricity can demage the parts on the circuit.
Slowly unscrew the cooling liquid tap if the liquid must be topped up.	An electric shock can kill
The vapor and the heated cooling liquid under pressure can burn face, eyes, skin.	
Do not fill tank completely.	
Wipe up spilled fuel before starting engine.	
Shut off fuel of tank when moving machine (where it is assembled).	
Avoid spilling fuel on hot engine.	
Sparks may cause the explosion of battery vapours	

☞ **FIRST AID.** In case the operator shold be sprayed by accident, from corrosive liquids a/o hot toxic gas or whatever event which may cause serious injuries or death, predispose the first aid in accordance with the ruling labour accident standards or of local instructions.

Skin contact	Wash with water and soap
Eyes contact	Irrigate with plenty of water, if the irritation persists contact a specialist
Ingestion	Do not induce vomit as to avoid the intake of vomit into the lungs, send for a doctor
Suction of liquids from lungs	If you suppose that vomit has entered the lungs (as in case of spontaneous vomit) take the subject to the hospital with the utmost urgency
Inhalation	In case of exposure to high concentration of vapours take immediately to a non polluted zone the person involved

☞ **FIRE PREVENTION.** In case the working zone,for whatsoever cause goes on fire with flames liable to cause severe wounds or death, follow the first aid as described by the ruling norms or local ones.

EXTINCTION MEANS	
Appropriated	Carbonate anhydride (or carbon dioxyde) powder, foam, nebulized water
Not to be used	Avoid the use of water jets
Other indications	Cover eventual shedding not on fire with foam or sand, use water jets to cool off the surfaces close to the fire
Particular protection	Wear an autorespiratory mask when heavy smoke is present
Useful warnings	Avoid, by appropriate means to have oil sprays over metallic hot surfaces or over electric contacts (switches,plugs,etc.). In case of oil sprinkling from pressure circuits, keep in mind that the inflamability point is very low.

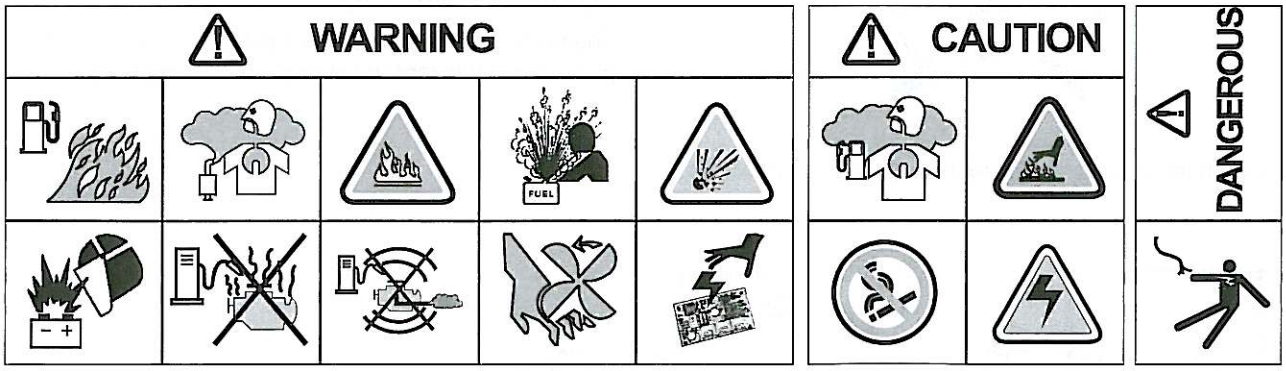

⚠ **WARNING** — ***THE MACHINE MUST NOT BE USED IN AREAS WITH EXPLOSIVE ATMOSPHERE***

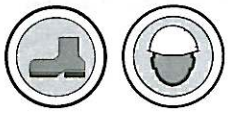

INSTALLATION AND ADVICE BEFORE USE

GASOLINE ENGINES

- Use in open space, air swept or vent exhaust gases, which contain the deathly carbone oxyde, far from the work area.

DIESEL ENGINES

- Use in open space, air swept or vent exhaust gases far from the work area.

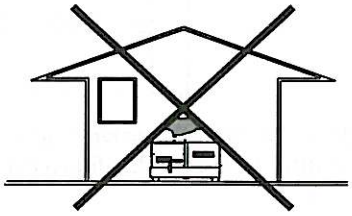

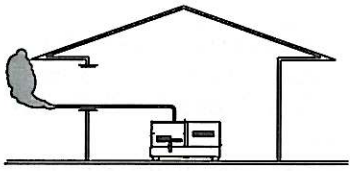

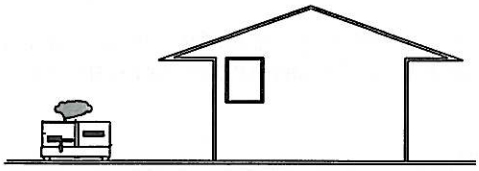

POSITION

Place the machine on a level surface at a distance of at least 1,5 m from buildings or other plants.

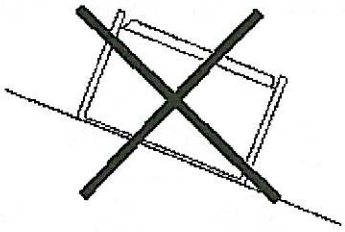

Maximum leaning of the machine (in case of dislevel)

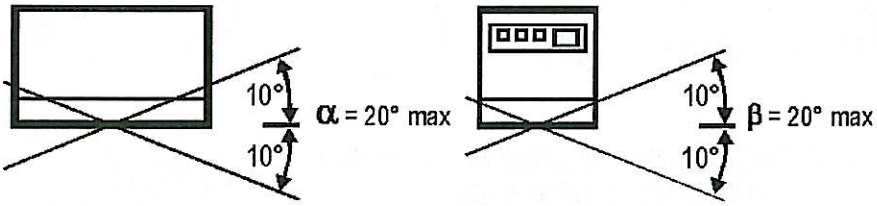

Check that the air gets changed completely and the hot air sent out does not come back inside the set so as to cause a dangerous increase of the temperature.

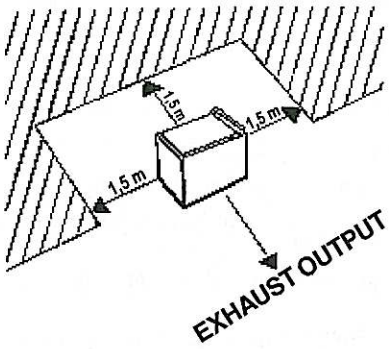

☞ Make sure that the machine does not move during the work: **block** it possibly with tools and/or devices made to this purpose.

MOVES OF THE MACHINE

☞ At any move check that the engine is **off**, that there are no connections with cables which impede the moves.

PLACE OF THE MACHINE

In spots where it often rains and/or there are flooded areas, do **not** put the machine:

- *in the bad weather*
- *in flooded places.*

Protect all the electric parts at risk, because water infiltrations could cause short circuits with damages at persons and/or things.

The protection degree of the machine is put on the data plate and in this manual at page "Technical Data".

GE 7000-7500 BS/GS

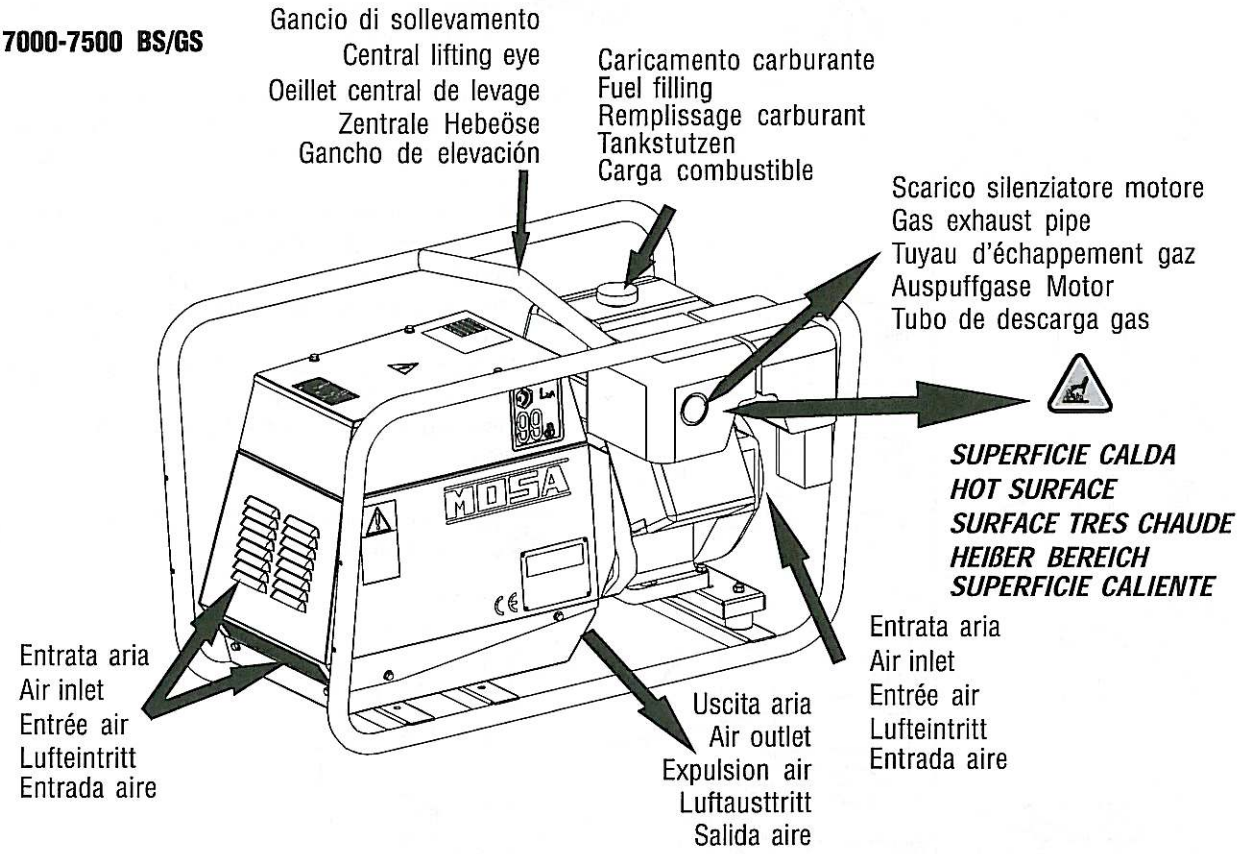

GE 6000-6500 DS-DES/GS

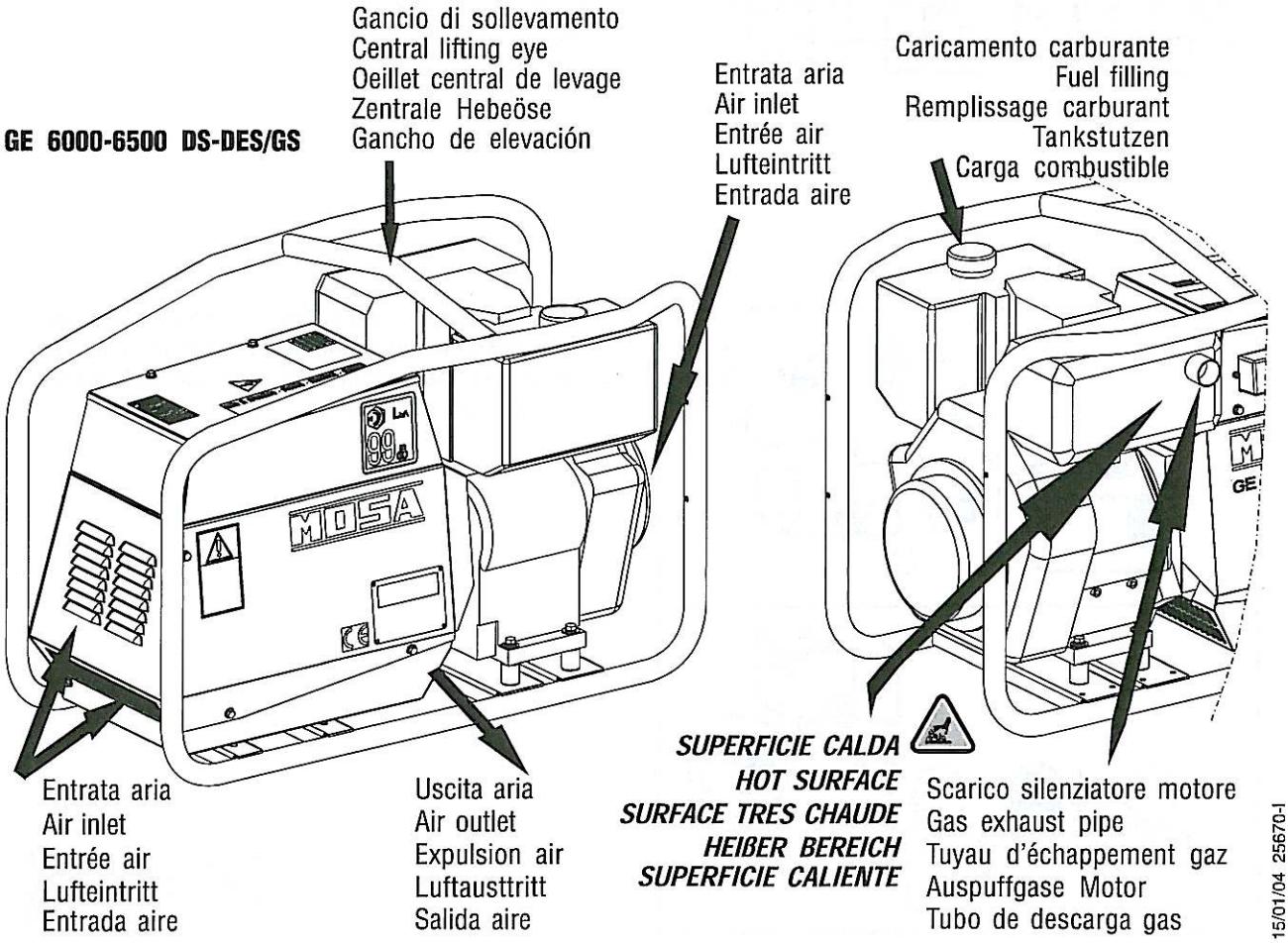

NOTE

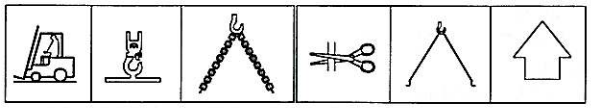

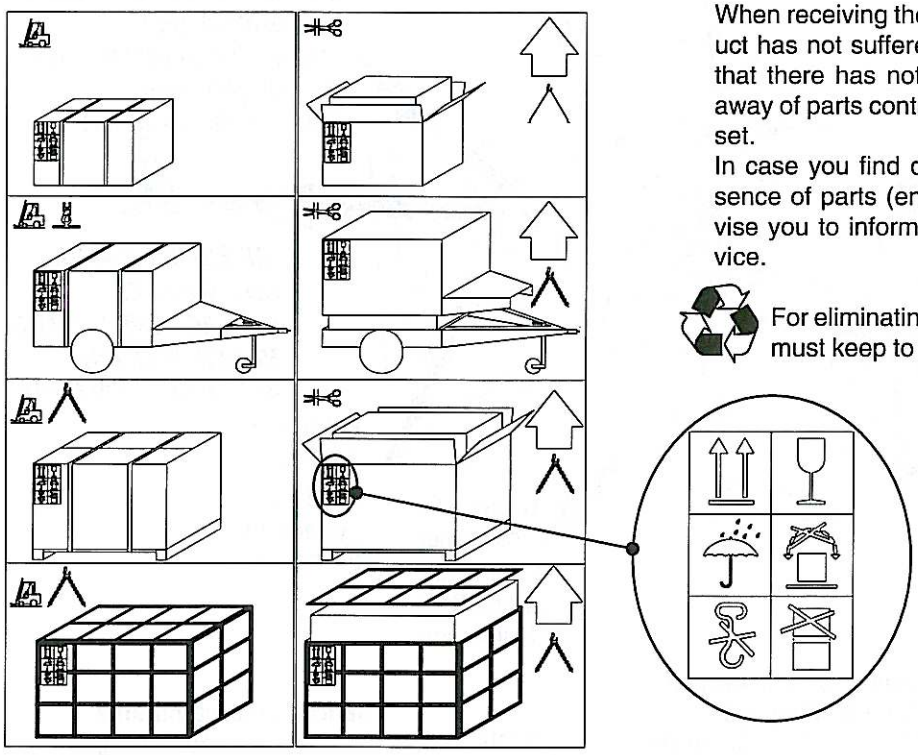

☞ Be sure that the lifting devices are: correctly mounted, adequate for the weight of the machine with it's packaging, and conforms to local rules and regulations.
When receiving the goods make sure that the product has not suffered damage during the transport, that there has not been rough handling or taking away of parts contained inside the packing or in the set.
In case you find damages, rough handling or absence of parts (envelopes, manuals, etc.), we advise you to inform immediately our Technical Service.

For eliminating the packing materials, the User must keep to the norms in force in his country.

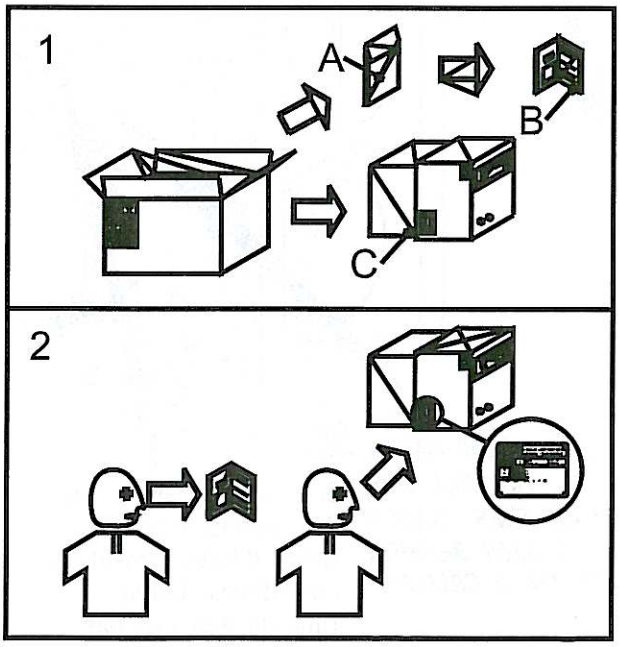

1) Take the machine (C) out of the shipment packing. Take out of the envelope (A) the user's manual (B).
2) Read: the user's manual (B), the plates fixed on the machine, the data plate.

NOTE

In case you should transport or move the machine, keep to the instructions as per the figures.
Make the transportation when the machine has **no** petrol in its tank, **no** oil in the engine and and electrolyte in the battery.
Be sure that the lifting devices are: correctly mounted, adequate for the weight of the machine with it's packaging, and conform to local rules and regulations.
Only authorized persons involved in the transport of the machine should be in the area of movement.

DO NOT LOAD OTHER PARTS WHICH CAN MODIFY WEIGHT AND BARICENTER POSITION.
IT IS STRICTLY FORBIDDEN TO DRAG THE MACHINE MANUALLY OR TOW IT BY ANY VEHICLE (model with no CTM accessory).
If you did not keep to the instructions, you could damage the structure of the machine.

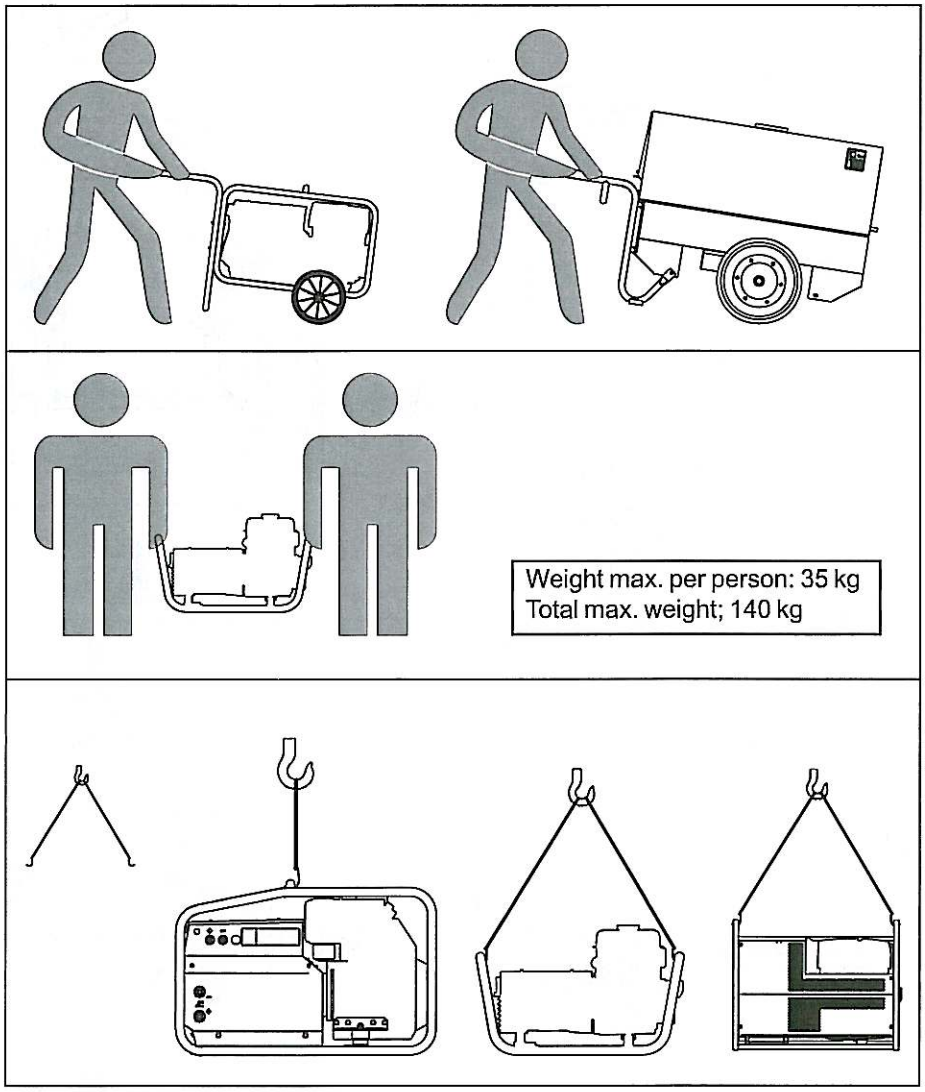

ATTENTION

The CTM accessory cannot be removed from the machine and used separately (actioned manually or following vehicles) for the transport of loads or anyway for used different from the machine movements.

Note: Lift the machine and assemble the parts as shown in the drawing

CTM 6/2

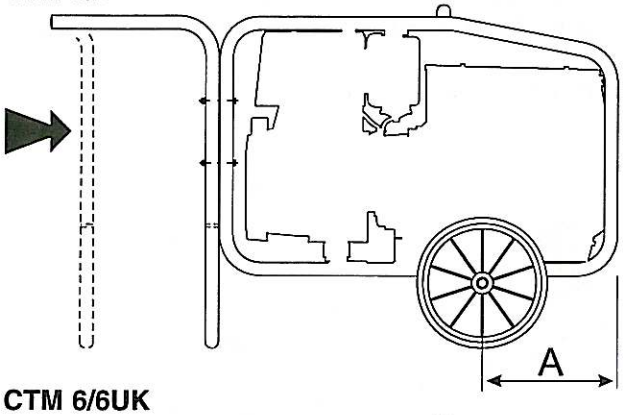

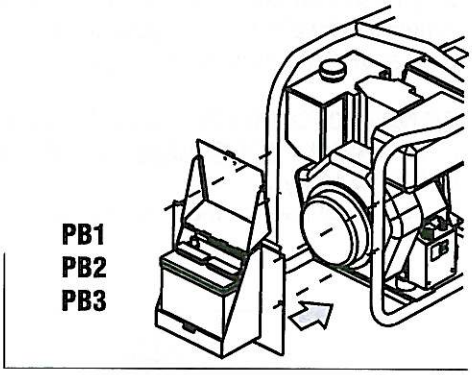

CTM 6/6UK

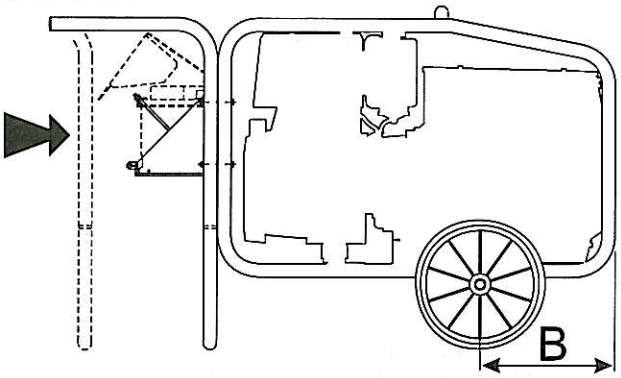

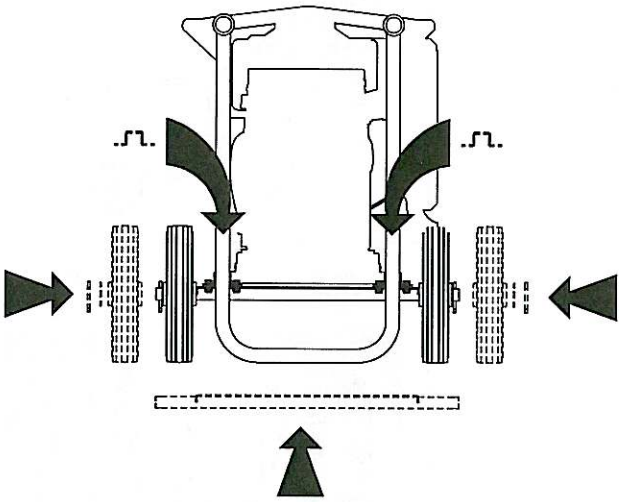

CTM 200

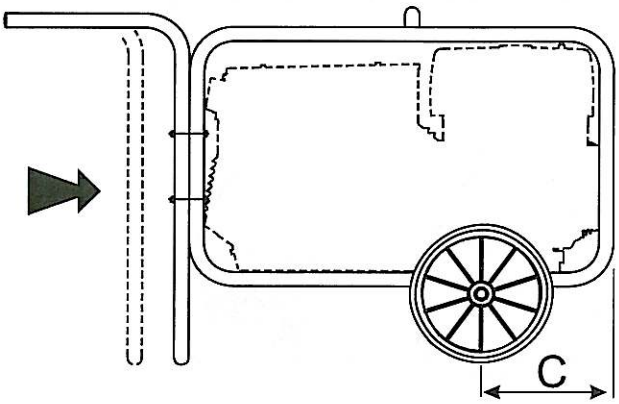

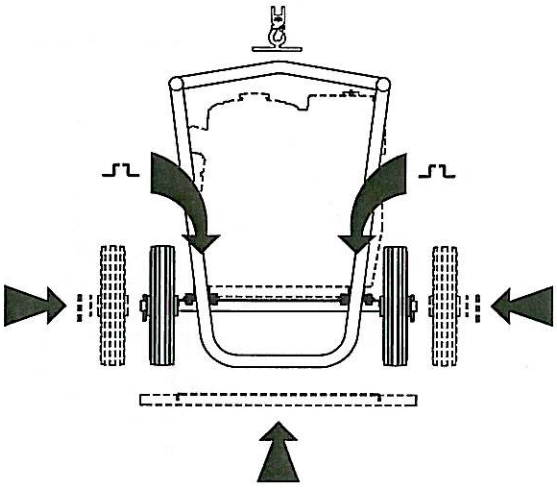

GE 7000 BS/GS	CTM 200	C	145 mm
GE 6000 DS/GS	CTM 6/2	A	310 mm
GE 6000 DES/GS	CTM 6/6UK	B	400 mm
GE 7500 BS/GS	CTM 200	C	205 mm
GE 6500 DS/GS	CTM 6/2	A	400 mm
GE 6500 DES/GS	CTM 6/6UK	B	400 mm

BATTERY

Take the battery out of the machine.

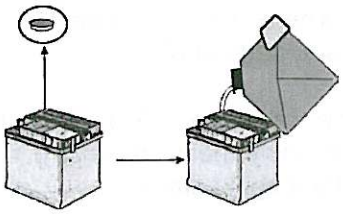

Fill the battery (S1) to the maximum level with electrolyte. Wait for about 30 minutes and top up with electrolyte.

In case of spilled acid, rinse with water before putting the battery back into the machine and reconnecting cables.

WARNING

Sulfuric acid is corrosive.
Protect hands, eyes and clothes

Take the battery out of the machine for filling.Warranty **VOIDED** for damages due to spilled acid.

LUBRIFICANT

Check the level of the engine oil using the oil dipstick. The level should be between the minimum and maximum marks. If necessary, add more oil.

If the air filter is of the oil bath type, fill it with the same oil up to the level indicated on the filter.

RECOMMENDED SAE VISCOSITY GRADES

For the type and viscosity of oil refer to owner's manual for the engine (supplied with the machine).

OIL AND COOLING LIQUID RECOMMENDED

MOSA advises to choose **AGIP** for the type of oil and cooling liquid.
Please keep to the label put on the engine for the recommended products.

Agip MOSA motosaldatrici gruppi elettrogeni

PRODOTTI RACCOMANDATI RECOMMENDED PRODUCTS	
AGIP SUPERDIESEL 15W/40 API CF4-SG	OLIO MOTORE DIESEL DIESEL ENGINE OIL
AGIP SUPERMOTOROIL 20W/50 API CC-SF	OLIO MOTORE BENZINA GASOLINE ENGINE OIL
AGIP ANTIFREEZE EXTRA INIBITE ETHYLENE GLYCOL (50% + 50% H_2O)	CIRCUITO DI RAFFREDDAMENTO COOLING CIRCUIT (CUNA NC 956-16 ED 97)

☞ ***NOTE:** Before starting the engine read the instructions in the owner's manual for the engine*

FUEL

Fill the tank with good quality diesel fuel.

☞ **ATTENTION**: Diesel fuel is highly inflammable; before filling the tank, stop the engine. Do not fuel in the presence of open flames.

If fuel is spilled on the engine, clean it immediately before starting up the engine.

COOLING LIQUID (Water-cooled engines only)

Pour the cooling liquid through the hole (24B) at the top of the radiator until it reaches the opening.

CLEANING OF DRY AIR FILTER

See page M43.

GROUND CONNECTION

A good ground is obligatory for all models with GFI (ground fault interrupter) / ELCB (earth leakage circuit breaker). These protective devices will not protect the operator unless there is a good ground.

☞ Use a good quality ground cable and connect it to the grounding point of the machine (12).
Follow all local rules and/or regulations in force.

Machines with Isometer protection do not need to be grounded.

Once the above operations have been completed,

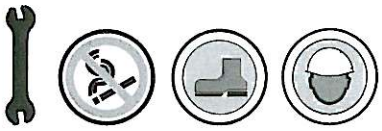

Check daily

NOTE

Do not alter the primary conditions of regulation and do not touch the sealed parts.

ENGINES WITH MANUAL RECOIL

Hold the starting handle firmly.

Pull the rope hard and fast. Pull it all the way out. Use two hands if necessary.

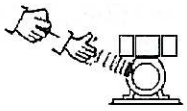

Then returning it slowly.

ENGINES WITH ACCELERATOR LEVER

Make sure that the accelerator lever or the switch (16) is at its minimum setting.

Insert the electric protection device (D-Z2-N2) lever towards above and, where mounted, check the isolation monitor (A3) see page M37 –

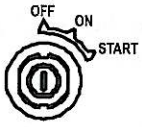

Introduce the key (Q1), turn it clockwise completely, leaving it as soon as the engine starts and/or the push button (32) (models without key) leaving it as soon as the engine starts.

☞ **NB.: <u>for safety reason the key must be kept by qualified personel.</u>**

Once the engine has started leave it running at a reduced speed for some minutes.

Accelerate the engine at max., set lever on maximum position and then take up load.

ENGINES WITHOUT ACCELERATOR LEVER

Insert the electric protection device (D-Z2-N2) lever towards above and, where mounted, check the isolation monitor (A3) see page M37 –

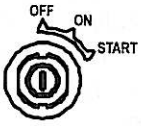

Introduce the key (Q1), turn it clockwise completely, leaving it as soon as the engine starts.

NB.: <u>for safety reason the key must be kept by qualified personel.</u>

Let the engine run for some minutes before drawing the load.

Open the fuel cock (where it is assembled).

CAUTION

RUNNING-IN
During the first 50 hours of operation, do not use more than 60% of the maximum output power of the unit and check the oil level frequently, in any case please stick to the rules given in the engine use manual.

NOTE

The machines with E.P.1 engine protection device (D1), use the accelerator lever ONLY IN EMERCENCY when the engine protection does not work. In this case turn immediately to our Authorized Assistance Centers.

ENGINE WITH PREHEATING GLOW PLUGS

Turn the starter key (Q1) on the position „preheating glow plugs" (the glow plugs light will be on I4), when the light is off, turn the starter key completely clockwise until the engine begins to fire.
Let the engine run for some minutes before drawing the lood.

ENGINES WITH R.P.M. ELECTRONIC ADJUSTER (ONLY FOR GENERATING SET)

Turn the starter key (Q1) completely clockwise until the engine begins to fire.

☞ Wait for the AUTOMATIC preheating time before drawing the load

OCCASIONAL USE OF THE ENGINE

Using the engine in special conditions which need an immediate intervention, such as emergency plants, etc., use advise to use our Engine Assistance Centres for specific interventions or our Technical Assistance Service.

⚠ CAUTION

If the engine fails to start, do not insist for at least 15 seconds.
Space the further operations waiting for at least 4 minutes.

⚠ CAUTION

MACHINE WITH EMERGENCY BUTTON

Before starting the engine, make sure that the emergency button (32B) is off (turn the button clockwise for this operation)

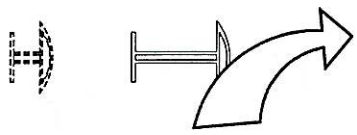

⚠ CAUTION

RUNNING-IN
During the first 50 hours of operation, do not use more than 60% of the maximum output power of the unit and check the oil level frequently, please follow the instructions on the engine use and maintenance manual..

☞ Before stopping the engine **it is compulsory** to effect the following operations:
- stop to draw three/single-phase current from the auxiliary sockets.

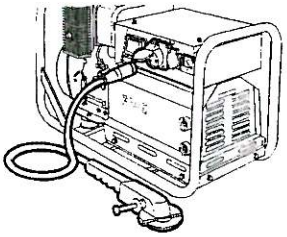

- stop to draw power from the welding sockets (only for TS models).

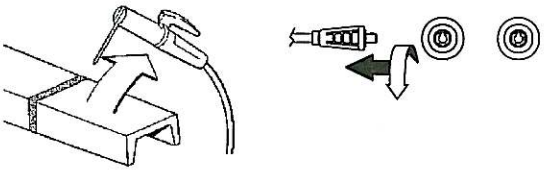

ENGINES WITH ACCELERATOR LEVER

☞ Make sure that the unit Is not supplying any power.

Disconnect the electrical protection device (D-Z2-N2) lever downward.

Set the accelerator lever or the switch (16) to minimum position and wait for a few minutes to allow the engine to cool, anyway follow the instructions contained in the engine manual.

Pull the stop lever (28) until the engine stops (where it is assembled).

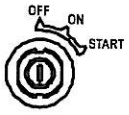

Remove the key (Q1) turning it counter clockwise, OFF position, then take it out.

☞ **NB.:for safety reason the key must be kept by qualified personel.**

ENGINES WITHOUT ACCELERATOR LEVER

Make sure that the unit is not supplying any power.

Disconnect the electrical protection device (D-Z2-N2) lever downward.
Let the engine idle for a few minutes.

Press the pushbutton (F3) until the engine stops (where it is assembled).

Shut the fuel cock (where it is assembled).

Remove the key (Q1) turning it counter clockwise, OFF position, then take it out.

☞ **NB.: for safety reason the key must be kept by qualified personel.**

ENGINES WITH R.P.M. ELECTRONIC ADJUSTER (ONLY FOR GENERATING SET)

Make sure that the unit is not supplying any power.
.
Disconnect the electrical protection device (D-Z2-N2 lever downward.

Let the engine idle for a few minutes.

Press the pushbutton (F3) until the engine stops (where it is assembled).

Remove the key (Q1) turning it counter clockwise, OFF position, then take it out.

☞ **NB.: for safety reason the key must be kept by qualified personel.**

⚠ CAUTION

MACHINE WITH EMERGENCY BUTTON
Pressing it, it allows to stop the engine in any condition (32B) (when assembled).
To re-establish it, see page M21...

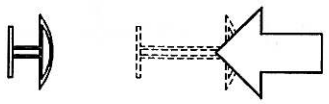

BATTERY

Take up the battery out of the machine.

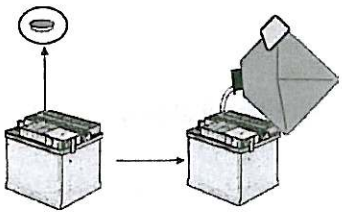

Fill the battery (S1) with electrolyte up to the maximum level. Wait for about 30 minutes and top up with electrolyte.

In case acid is spilled, rinse with much water before reassembling the battery, reconnect the cables.

WARNING

Sulfuric acid is corrosive. Protect hands, eyes and clothes.
Take the battery out of the machine for filling.
Warranty **VOIDED** for damages due to spilled acid.

LUBRICANT

Check the level of the engine oil using the (appropriate oil dipstick: the level should be between the minimum and maximum marks.

If necessary, add more oil through the appropriate inlet

Fill the air filter using the same oil up to the level indicated on the filter (machine with **oil bath** air filter).

OIL RECOMMENDED

MOSA advises to choose **AGIP** for the type of oil.

Please keep to the label put on the engine for the recommended products.

Agip MOSA motosaldatrici gruppi elettrogeni

PRODOTTI RACCOMANDATI RECOMMENDED PRODUCTS	
AGIP SUPERDIESEL 15W/40 API CF4-SG	OLIO MOTORE DIESEL DIESEL ENGINE OIL
AGIP SUPERMOTOROIL 20W/50 API CC-SF	OLIO MOTORE BENZINA GASOLINE ENGINE OIL
AGIP ANTIFREEZE EXTRA INIBITE ETHYLENE GLYCOL (50% + 50% H_2O)	CIRCUITO DI RAFFREDDAMENTO COOLING CIRCUIT (CUNA NC 956-16 ED 97)

☞ ***NOTE**: before starting and switching off, see instructions in the engine ownerís manual herewith attached.*

FUEL

Check the level of fuel in the tank and, if necessary, add more standard gasoline of any type you can buy (e.g. 84-96 ON).

If during the filling of the tank some gasoline is accidentally spilled around the engine chassis, clean it immediately before starting up the engine.

ENGINE WITH OIL ALERT DEVICE

The OIL ALERT device will stop the engine in case of no oil or insufficient amount of oil in the engine.

In case one tries to start the engine with oil below the minimum level, the warning light (when assembled) will light and the device will not allow starting.

CLEANING OF DRY AIR FILTER

See page M43.

GROUND CONNECTION

☞ It is **obligatory** to connect the ground connection point (12) by means of a sure efficient cable (please follow the installation local rules and/or regulations in force) in order to integrate or ensure the working of various electric protection devices referring to the several distribution systems TN.

The unit can be started only when the above operations have been correctly performed.

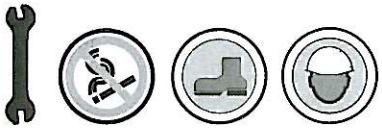

Check daily

NOTE

Do not alter the primary conditions of regulation and do not touch the sealed parts.

ENGINES WITH ELECTRIC START

IInsert the electric protection device (D-Z2-N2) lever towards above and, where mounted, check the isolation monitor (A3) see page M37 -

Check the battery connection with the respective terminals (+) (-).

Open the gosoline cock; use the starter if the engíne is cold and the temperature is low.

Introduce the key (Q1), turn it clockwise completely, leaving it as soon as the engine starts and/or the push button (32) (models without key) leaving it as soon as the engine starts.

☞ **NB.: <u>for safety reason the key must be kept by qualified personel.</u>**

Once the engine is started, with the starter off, let it turn for a few minutes before drawing the load.

Accelerate the machine by means of the right lever (16), when it is assembled.

ENGINE WITH NO ELECTRIC START

Insert the electric protection device (D-Z2-N2) lever towards above and, where mounted, check the isolation monitor (A3) see page M37-

Open the gasoline cock; use the starter if the engine is cold and the temperature is low.

Hold the starting handle firmly.

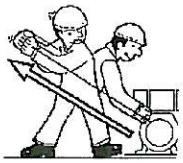

Pull the rope hard and fast. Pull it all the way out. Use two hands if necessary.

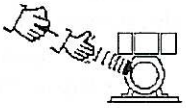

Then returning it slowly.

Once the engine is started, with the starter off, let it turn for a few minutes before drawing the load.

Accelerate the machine by means of the right lever (16), when it is assembled.

EMERGENCY START
(wlth rope)

In the versions with electric start, in case of need, it is possible to start the engine with the rope.

CAUTION

If the engine fails to start, do not insist for at least 15 seconds.

Space the further operations waiting for at least 4 minutes.

CAUTION

RUNNING-IN
During the first 50 hours of operation, do not use more than 60% of the maximum output power of the unit and check the oil level frequently., *in any case please stick to the rules given in the engine use manual.*

☞ Before stopping the engine **it is compulsory** to effect the following operations:

- stop to draw three/single-phase current from the auxiliary sockets.

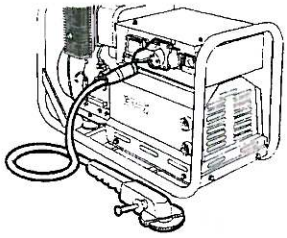

- stop to draw power from the welding sockets (only for TS models).

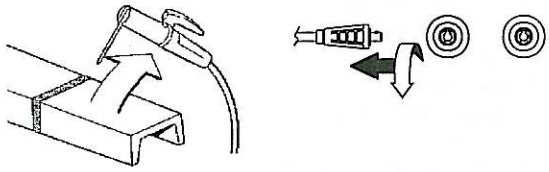

ENGINES WITH ELECTRIC START

☞ Make sure that the machine is not under load.

Wait for a few minutes to allow the engine to cool down, anyway follow the instructions contained in the engine manual.

Shut the gasoline cock.

Take out the key (Q1), turning it counter clockwise (when assembled) or pressing the stop button (32) until the engine stops.

☞ **NB.: for safety reason the key must be kept by qualified personel.**

ENGINES WITHOUT ELECTRIC START

☞ Make sure that the machine is not under load.

Wait for a few minutes to allow the engine to cool down, take however into consideration the prescriptions given in the engine use manual.

Shut the gasoline cock.

Set the engine switch (32) to the OFF position.

4A	Hydraulic oil level light
9	Welding socket (+)
10	Welding socket (-)
12	Earth terminal
15	A.C. socket
16	Accelerator lever
17	Feed pump
19	48V D.C. socket
22	Engine air filter
23	Oil level dipstick
24	Engine oil reservoir cap
24A	Hydraulic oil reservoir cap
24B	Water filling cap
25	Fuel prefilter
26	Fuel tank cap
27	Muffler
28	Stop control
29	Engine protection cover
30	Engine cooling/alternator fan belt
31	Oil drain tap
31A	Hydraulic oil drain tap
31B	Water drain tap
31C	Exhaust tap for tank fuel
32	Button
33	Start button
34	Booster socket 12V
34A	Booster socket 24V
35	Battery charge fuse
36	Space for remote control
37	Remote control
42	Space for E.A.S.
42A	Space for PAC
47	Fuel pump
49	Electric start socket
54	Reset button PTO HI
55	Quick coupling m. PTO HI
55A	Quick coupling f. PTO HI
56	Hydraulic oil filter
59	Battery charger thermal switch
59A	Engine thermal switch
59B	Aux current thermal switch
59C	Supply thermal switch wire feeder-42V
63	No load voltage control
66	Choke control
67A	Auxiliary / welding current control
68	Cellulosic electrodes control
69A	Voltmeter relay
70	Warning lights
71	Selecting knob
72	Load commut. push button
73	Starting push button
74	Operating mode selector
75	Power on' warning light
76	Display
79	Wire connection unit
86	Selector
86A	Setting confirmation
87	Fuel valve
A3	Insulation monitoring
A4	Button indicating light 30 l/1' PTO HI
B2	Engine control unit EP2
B3	E.A.S. connector
B4	Exclusion indicating light PTO HI
B5	Auxiliary current push button
C2	Fuel level light
C3	E.A.S. PCB
C6	Control unit for generating sets QEA
D	Ground fault interrupter (30 mA)
D1	Engine control unit and economiser EP1
D2	Ammeter
E2	Frequency meter
F	Fuse
F3	Stop switch
F5	Warning light, high temperature
F6	Arc-Force selector
G1	Fuel level transmitter
H2	Voltage commutator
H6	Fuel electro pump
I2	48V A.C. socket
I3	Welding scale switch
I4	Preheating indicator
I5	Y/s switch
I6	Start Local/Remote selector
L	A.C. output indicator
L5	Emergency button
L6	Choke button
M	Hour counter
M1	Warning level light
M2	Contactor
M5	Engine control unit EP5
M6	CC/CV switch
N	Voltmeter
N1	Battery charge warning light
N2	Thermal-magnetic circuit breaker/Ground fault interrupter
N5	Pre-heat push-button
N6	Connector – wire feader
O1	Oil pressure warning light/Oil alert
P	Welding arc regulator
Q1	Starter key
Q3	Derivation box
Q4	Battery charge sockets
R3	Siren
S	Welding ammeter
S1	Battery
S3	Engine control unit EP4
S6	Wire feeder supply switch
T	Welding current regulator
T4	Dirty air filter warning light/indicator
T5	Earth leakage relay
U	Current trasformer
U3	R.P.M. adjuster
U4	Polarity inverter remote control
U5	Relase coil
V	Welding voltage voltmeter
V4	Polarity inverter control
V5	Oil pressure indicator
W1	Remote control switch
W3	Selection push button 30 l/1' PTO HI
W5	Battery voltmeter
X1	Remote control socket
Y3	Button indicating light 20 l/1' PTO HI
Y5	Commutator/switch, serial/parallel
Z2	Thermal-magnetic circuit breaker
Z3	Selection push button 20 l/1' PTO HI
Z5	Water temperature indicator

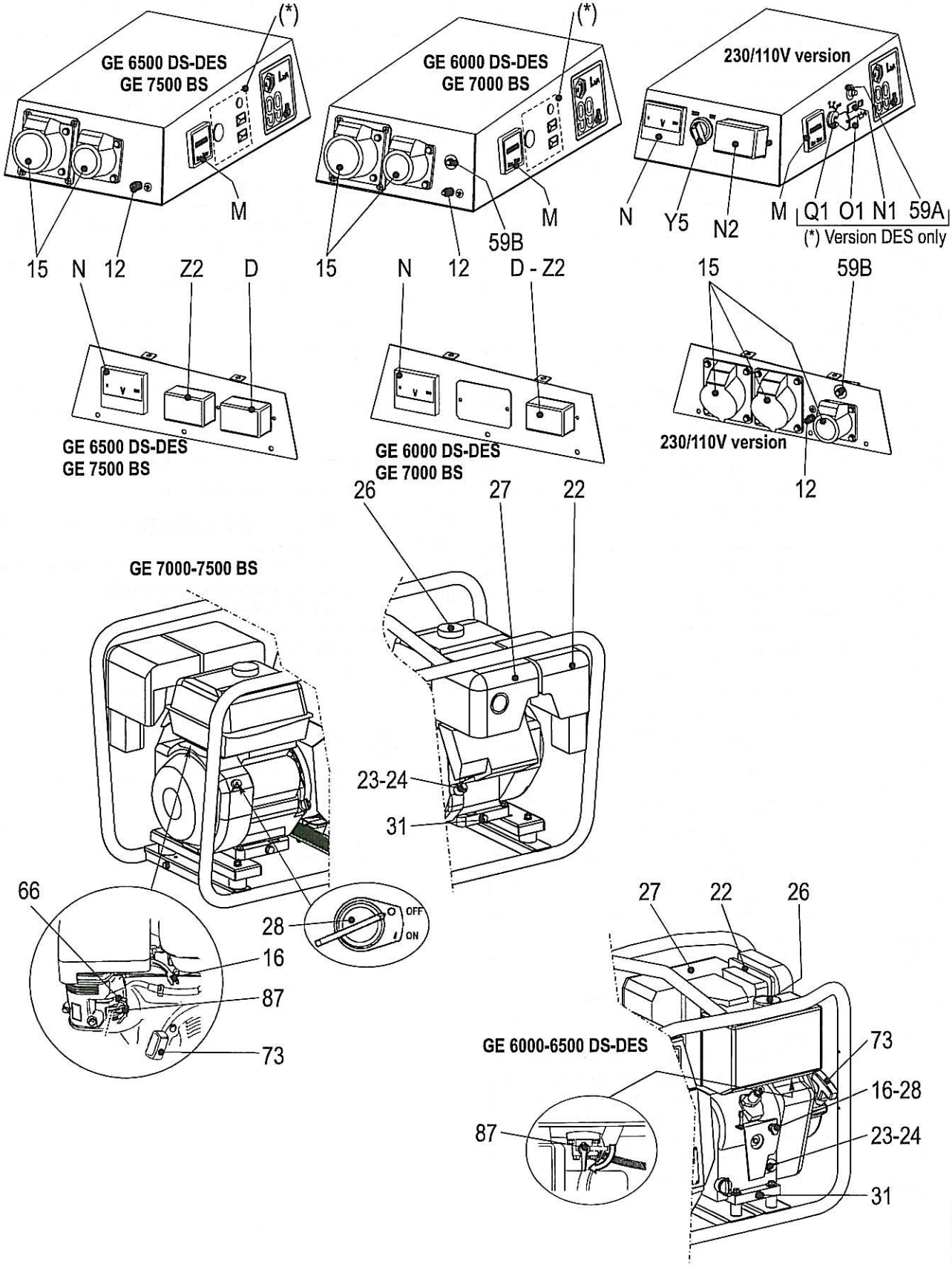
GE 6500 DS-DES
GE 7500 BS
(*)
M
15
N
12
Z2
D
GE 6000 DS-DES
GE 7000 BS
(*)
59B
M
15
N
12
D - Z2
230/110V version
N
Y5
N2
M
Q1 O1 N1 59A
(*) Version DES only
15
59B
12
GE 6500 DS-DES
GE 7500 BS
GE 6000 DS-DES
GE 7000 BS
230/110V version
26
27
22
GE 7000-7500 BS
23-24
31
66
28
OFF
ON
16
87
73
27
22
26
GE 6000-6500 DS-DES
73
16-28
87
23-24
31

According to the version of the machine on the front panel there are assembled some instruments:

3~CEE 1~CEE	warning lights (L) corresponding to the current sockets on the front panel, indicate that the current can be drawn from the sockets when they are lit (15);
	voltmeter (N);
D MT T MTD	GFI (D), Thermal magnetic circuit breaker (Z2) (TS...PL: : one for each auxiliary socket) or Thermal magnetic circuit breaker/GFI (N2);
V	voltage selector switch (H2);
R<	insulation monitoring (A3)- See page M 39.10 -;
h	hour-counter (M), which indicates the hours of effective operation of the unit;
FUSE	fuse (F), which protects the electric circuit of the engine, replacement of which, in case it breaks, must be effected absolutely with the machine stopped. Remove the mechanical protection, then shift down the small lever of the fuse holder placed on the front panel;
	fuel level gauge (M1): when the quantity of fuel in the tank falls below 5 litres a worning light on the instrument panel lights up;
	fuel level indicator (C2);
	preheating glow plugs warning light (I4) for the preheating (for diesel engines it shows the intervention time of the glow plugs);
	dirty air filter warning light (T4);
A	ammeter (D2) indicates the drown current. In case current is drawn simultaneously from several sockets, it shows the current sum. (DO NOT GO OVER THE MAX. CURRENT INDICATED ON THE LABEL);
	star/ triangle switch (I5);
Hz	frequency meter (E2), that indicates the frequency generated and therefore the number of revolutions of the engine: the frequency should be of 52 Hz» or 62 Hz» when the unit is idle and about 50 Hz or 60 Hz at full load (in cose that the found volue is different make sure that the engine is completely accelerated), (do never use the unit with a frequency lower than 49 Hz or 59 Hz, in this case decrease the load);
	tone horn (R3)) indicates the defects in the engine;
	engine protections: EV - EP1 (D1) (for engine at 3000/3600 rpm.), EP2 (B2 for engine at 1500/1800 rpm), EP4 – EP5 (M5)- See pag. M39 .... - ;
OFF ON START	starter key (Q1) and engine stop;
ONLY GOUGING + -	welding socket (gouging, when assembled, - 9+ - 10-) - See pag. M 34 -;
	Emergency button (L5);
	Control switch for accelerator (only for engine at 3000/3600 rpm) - ☞ WE ADVISE TO USE THE SWITCH ONLY IF THE EP1 DEVICE IS BROKEN);
	auxiliary current push button (B5);
ON OFF ARC FORCE	welding current regulator (T) and/or „arc force" selector (F6) - See pag. M34 -1;
100% XXX A max	welding scale switch (I3);
+ Polarity switch −	polarity inverter control (V4);- See pag M34 -1;
ON OFF	cellulosic electrodes control (68);- See pag M34 -1;
FUSE	Protection fuse for welding PCB, welding ammeter (S);
ON OFF	remote control switch (W1) and remote control socket (X1) - See pag M38 .... -;
CC CV	switch CC/CV (M6)- See pag M34 -1;-

☞ **It is strictly forbidden to connect the group to the public mains a/o to another source of electric power.**

⚠ WARNING

*Sockets are not **self-locked**: tension is avaible immediately after starting also with no plug.*

⚠ WARNING

The areas, **access** of which is forbidden to unqualified personel, are:
- the control switchboard (front), the exhaust of the endothermic engine.

☞ At the beginning of every work, check the electric parameters and/or the controls placed on the front.

Make sure the unit is properly grounded (12) (where it is assembled).
- See page M20, 21, 22, 25, 26, 27 -.

Move the accelerator lever (16) and reach the engine maximum speed, except for the engines with constant rpm; the voltmeter (N) (where it is assembled) shows the single-phase voltage whether three or single-phase current has to be drawn.

Nominal voltage	Indicative no-load voltage	
	asynchronous	synchronous (*)
110V	±10%	±5%
230V	±10%	±5%
230V	±10%	±5%
400V	±10%	±5%

*N.B.: with electronic tens. regul. RVT ±1%

Connect up the machine, using proper plugs and cables in good condition to the AC socket (15) to draw single or three-phase power, or, by cables with adeguate section, to the terminal board, placed inside the derivation box (Q3).

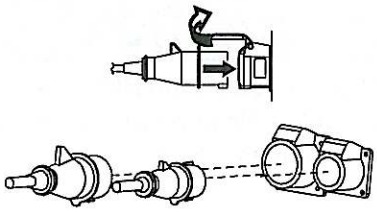

The warning light (L), located near the current socket, lights up when the unit can supply alternated current, on condition that the engine is at the maximum rpm.

☞ N.B.: if the warning light does not flash, check the accelerator which must bebat its maximum, or the fuse of the relevant socket. (single-phase) or the thermoprotection.

Using several sockets at tha same time, the maximum power possible is that indicated on the data plate.

To draw power simultaneously in the TS welder version see page M52.

⚠ CAUTION

The replacement of the fuse must absolutely be done with the engine off (remove the mechanical protection, then shift down the small lever of the fuse holder placed on the front panel).

The max. continuous power of the generating set or theload current must not be exceeded.

MACHINE WITH THERMOPROTECTION

If you overload the genset the thermoprotection will automatically switch off.
If the thermoprotection is released, disconnect all the connected loads.

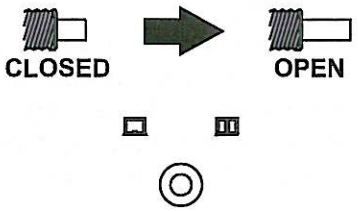

Reset the thermoprotection pressing the central pole.
When reset, connect the loads again.
In case the protection should act furtherly, check: the connections, the wires or others, and if necessary call the Assistance Service.

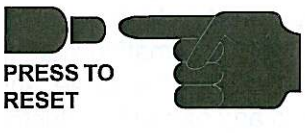

Avold to hold the central pole of the thermoprotection pressed for a long time.
Otherwise, in case of trouble, it will not click, **damaging** the generating set.

TS ... PL VERSION

Start the machine and wait for the end of the preheating time imposed by the EP1, EP2, EP5 engine protection device. - See pages M39... -
Press the „generation possibility" push button (B5) placed on the font side of machine.
The voltmeter will show the auxiliary voltage which, for machines at 1500/1800 RPM, must. be approx. ≈230V ± 10% and for machines at 3000/3600 RPM (engine idling) must. be approx. ≈180V ± 10%.

Push upwards the lever of magnetothermic switch reffering to the socket from which load is to be drawn.

MACHINE WITHOUT PROTECTIVE DEVICE

In case machine is not equipped with protective device of indirect contacts, by means of automatic breaking of supply, it **is necessary** to put between the load and the generation a differential switch or a similar equipment capable, in any case, to observe the regulations in force CEI 64/8 (and/or successive) Part 4 Par. 4.13.1 and harmonzed by directive Nr. 72/23/EEC.

UNIT FITTED WITH GROUND FAULT INTERRUPTER SWITCH (GFI)

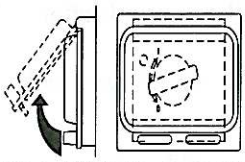

Turn on the GFI safety-switch (D) by pushing it upwards.

The GFI is a safety device which protects the circuit in the event of a malfunction. In this case the switch disconnects the three and single-phase circuit when in any part of the electric connections a current leakage of more than 30 mA occurs.

UNIT FITTED WITH THERMAL MAGNETIC BREAKER

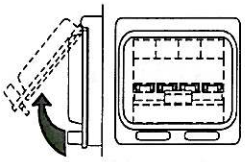

Turn on the thermal magnetic breaker (Z2) by pushing it to the ON position.

The thermal-magnetic breaker is a safety device which protects the circuit in the event of a malfunction. In this case the switch disconnects the three and single-phase circuit when in any part of the electric connections a short circuit or a current absorption occurs above the data specified on the label of the unit.
In the model with setting **DO NOT INTERVENE** on the setting itself. To modify it, please contact our Technical Assistance Service.

UNIT FITTED WITH GFI SWITCH THERMAL MAGNETIC BREAKER

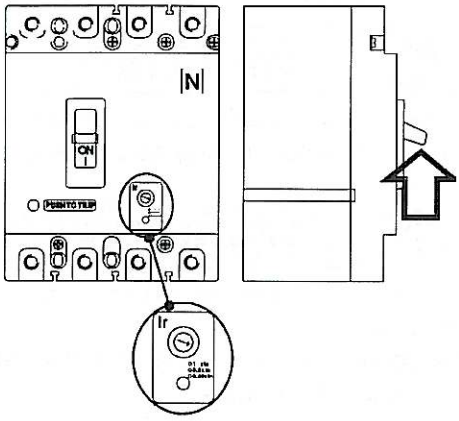

This switch includes the characteristics of both types of breakers (N2).

UNIT WITH VOLTMETRIC COMMUTATOR (ONLY FOR GENERATING SET)

☞ **WARNING:** the possible single-phase loads must be correctly divided in the three phases, in order to avoid any possible voltage fall on one phase that results excessively loaded.

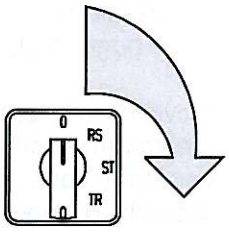

Check the voltages on the various phases with the switch located on the front (H2) and check, reading on the voltmeter (N) about the same voltage value

☞ N.B.: in case of overload, it is possible that the engine lowers its speed and the voltage is reduced remarkably. In this case, it is necessary to reduce immediately the load.

⚠ CAUTION

For machines at 3000/3600 RPM the EP1 safety device will automatically provide to accelerate engine when load is drawn.
- See page M39.1 -

PROBLEM	POSSIBLE CAUSE	WHAT TO DO
ASYNCHRONOUS ALTERNATORS		
No output	1) GFI or Isometer (if installed) have been activated	1) Reset GFI or Isometer. If they are activated again check the cables and tools attached to the auxiliary sockets for short circuits or grounded leads
	2) Thermal protection activated or fuse burned out	2) Reset the thermal protection and check the fuses of the single phase sockets.
	3) Overload	3) Disconnect the load and see if the voltage is normal. If so the load caused the generator to lose its excitation. This can occur when the kWatt of the load is larger than that of the generator or, in the case of inductive loads (motors), when the device has a high starting current. In both cases the solution is a larger genset.
	4) Bad condenser or stator burned out	4) Disconnect all leads from the stator except for those going to the condenser boxIf there is no output from the auxiliary leads check the condenser box. If it is OK replace the stator.
SYNCHRONOUS ALTERNATORS		
No outputMechanical damage	1) Overload - circuit breaker activated	1) Remove the load and insert the circuit breaker. Reconnect the load. If it activates again check the rating of the load and the wiring between load and generator.
	2) GFI or Isometer (if installed) have been activated	2) Remove the load and reset Isometer or GFI. Check without the load. If they activate there is an isolation fault or leakage to ground in the generator or internal wiring. If not, reconnect the load. If they are activated with the load attached there is an isolation fault or leakage to ground in the load or related cables.
	3) Fuse burned out	3) Check the fuses of the single phase sockets.
	4) Stator burned out	4) Disconnect the load and see if the voltage is normal. If there is not output replace the alternator.
	5) Carbon brushes worn out	5) Chek the condition of the brushes (if mounted) and their position.
Mechanical damage	6) Carbon brushes worn out	6) Worn out brushes can damage the brush holder and/or collector.

⚠ WARNING

MOVING PARTS can injure

- Have **qualified** personnel do maintenance and troubleshooting work.
- Stop the engine before doing any work inside the machine. If for any reason the machine must be operated while working inside, **pay attention** moving parts, hot parts (exhaust manifold and muffler, etc.) electrical parts which may be unprotected when the machine is open.
- Remove guards only when necessary to perform maintenance, and replace them when the maintenance requiring their removal is complete.
- Use suitable tools and clothes.
- Do not modify the components if not authorized.

- See pag. M1.1 -

HOT surface can hurt you

By maintenance at care of the utilizer we intend all the operatios concerning the verification of mechanical parts, electrical parts and of the fluids subject to use or consumption during the normal operation of the machine.

For what concerns the fluids we must consider as maintenance even the periodical change and or the refills eventually necessary.

The routine cleaning of the machine is also considered maintenance.

The repairs **cannot be considered** among the maintenance activities, i.e. the replacement of parts subject to occasional damages and the replacement of electric and mechanic components consumed in normal use, by the Assistance Authorized Center as well as by MOSA.

The replacement of tires (for machines equipped with trolleys) must be considered as repair since it is not delivered as standard equipment any lifting system.

For the maintenance of the gasoline or Diesel engine please refer to the specific manual supplied with the unit.
The periodic maintenance should be performed according to the schedule shown in the engine manual. An optional hour counter (M) is available to simplify the determination of the working hours.

Every day check the oil level in the engine and in the air filter (if at oil bath). Make sure that these are no obstructions in the aspiration/exhaust ducts of the alternator, in the engine or in the cover (pieces of material, leaves or other).
See page M21 and M26.

⚠ NOTE

THE ENGINE PROTECTION DO NOT WORK WHEN THE OIL IS OF LOW QUALITY BECAUSE NOT CHARGED REGULARLY AT INTERVALS AS PRESCRIBED IN THE OWNER'S ENGINE MANUAL.

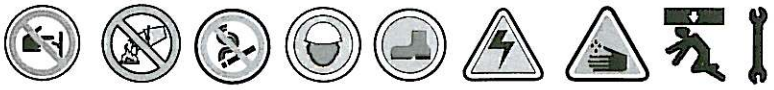

UNITS WITH ELECTRIC STARTER

Check periodically the electrolyte level in the battery, especially after long periods of inactivity.

☞ **ATTENTION**: the battery must have all its elements in good condition and must be filled with electrolyte.

The battery is automatically charged while the engine is running at speed.

☞ **N.B.:** In the models with safety protections, in case the battery is not reloaded, check the thermic protection (59A) reload it if it is the caseas well as the fuse (35).

PROCEDURE FOR RECHARGING A BATTERY

Keep to the advice indicated page - M36 -
Take off the breather caps of the battery.
Check the electrolyte level in all the elements of the battery.
If necessary, add up **distilled water** to have the liquid at the recommended level.
Put back the breather caps of the battery.
Use a densimeter to determine the charge state of the battery.

SPECIFIC WEIGHT	CHARGE PERCENTAGE
1.265	100%
1.230	75%
1.200	50%
1.170	25%

MODELS WITH DRY AIR FILTER (CLEANING)

Replace the air filter cartridge every 200 hours when using the unit in a clean environment.

In a dusty environment, the filter cartridge must be replaced every 100 hours.

ALTERNATOR (brushless)

No other further periodical maintenance is necessary, as the alternator has no brushes or slip tings, and the output regulation is entirely electronic.

ALTERNATOR (with brushless)

Control the wear and the position of the carbon brushes at regular intervals (refer to the alternator manual supplied with the machine for details).

MODEL WITH COOLING LIQUID

Every day check the cooling liquid level.
Verify each day freezing liquid and check periodically the radiator state (losses obstructions for air circulation etc.)

☞ ***N.B.:*** *all warning and decals should be checked once a year and* ***replaced*** *if missing or unreadable.*

Check periodically the condition of the cables and tighten the connections.

In case the machine should not be used for more than 30 days, make shure that the room in which it is stored presents a suitable shelter from heat sources, weather changes or anything which can cause rust, corrosion or damages to the machine. See page M45.

In the maintenance operations avoid that polluting substances, liquids, exhausted oils, etc. bring damage to people or things or can cause negative effects to surroindings, health or safety respecting completely the laws and/or dispositions in force in the place.

In case of necessity for first aid and of fire prevention, see page. M2.5.

⚠ IMPORTANT

In the maintenance operations avoid that polluting substances, liquids, exhausted oils, etc. bring damage to people or things or can cause negative effects to surroindings, health or safety respecting completely the laws and/or dispositions in force in the place.

In case the machine should not be used for more than 30 days, make sure that the room in which it is stored presents a suitable shelter from heat sources, weather changes or anything which can cause rust, corrosion or damages to the machine.

☞ Have **qualified** personnel prepare the machine for storage.

GASOLINE ENGINE

Start the engine: It will run until it stops due to the lack of fuel.

Drain the oil from the engine sump and fill it with new oil (see page M25).

Pour about 10 cc of oil into the spark plug hole and screw the spark plug, after having rotated the crankshaft several times.

Rotate the crankshaft slowly until you feel a certain compression, then leave it.

In case the battery, for the electric start, is assembled, disconnect it.

Clean the covers and all the other parts of the machine carefully.

Protect the machine with a plastic hood and store it in o dry place.

DIESEL ENGINE

For short periods of time it is advisable, about every 10 days, to make the machine work with load for 15-30 minutes, for a correct distribution of the lubricant, to recharge the battery and to prevent any possible bloking of the injection system.

For long periods of inactivity, turn to the after soles service of the engine manufacturer.

Clean the covers and all the other parts of the machine carefully.

Protect the machine with a plastic hood and store it in a dry place.

In case of necessity for first aid and of fire prevention, see page. M2.5.

⚠ IMPORTANT

In the storage operations avoid that polluting substances, liquids, exhausted oils, etc. bring damage to people or things or can cause negative effects to surroindings, health or safety respecting completely the laws and/or dispositions in force in the place.

☞ Have **qualified** personnel disassemble the machine and dispose of the parts, including the oil, fuel, etc., in a correct manner when it is to be taken out of service.

As cust off we intend all operations to be made,at utilizer's care,at the end of the use of the machine. This comprises the dismantling of the machine, the subdivision of the several components for a further reutilization or for getting rid of them, the eventual packing and transportation of the eliminated parts up to their delivery to the store, or to the bureau encharged to the cust off or to the storage office, etc.

The several operations concerning the cust off, involve the manipulation of fluids potentially dangerous such as: lubricating oil and battery electrolyte.

The dismantling of metallic parts liable to cause injuries or wounds, must be made wearing heavy gloves and using suitable tools.

The getting rid of the various components of the machine must be made accordingly to rules in force of law a/o local rules.
Particular attention must be paid when getting rid of:
lubricating oils, battery electrolyte, and inflamable liquids such as fuel, cooling liquid.

The machine user is responsible for the observance of the norms concerning the environment conditions with regard to the elimination of the machine being cust off and of all its components.

In case the machine should be cust off without any previous disassembly it is however compulsory to remove:
- tank fuel
- engine lubricating oil
- cooling liquid from the engine
- battery

NOTE: MOSA is involved with custing off the machine **only** for the second hand ones, when not reparable.
This, of course, after authorization.

In case of necessity for first aid and fire prevention, see page M2.5.

IMPORTANT

In the cust-off operations avoid that polluting substances, liquids, exhausted oils, etc. bring damage to people or things or can cause negative effects to surroindings, health or safety respecting completely the laws and/or dispositions in force in the place.

The generating sets GE 7000 - 7500 are units which transform the mechanical energy, generated by endothermic engine, into electric energy, through an alternator.

They are meant for industrial and professional use, powered by an endothermic engine; they are composed of various main parts such as: engine, alternator, electric and electronic controls, the fairing or a protective structure.

The assembling is made on a steel structure, on which are provided elastic support which must damp the vibrations and also eliminate sounds which would produce noise.

Technical data	GE 7000 BS/GS	GE 7500 BS/GS
GENERATOR		
*Three-phase generation (*Stand-by)*	–	7 kVA (5.6 kW) / 400 V / 10.1 A
Single-phase generation	6 kVA (5.4 kW) / 230 V / 26 A	4 kVA / 230 V / 17.4 A
Single-phase generation	6 kVA (5.4 kW) / 110 V / 54,5 A	-
Power factor (Cos φ) / Duty cycle	0,9 / 100 %	0,8 / 100 %
Frequency	50 Hz	50 Hz
ALTERNATOR	Self-excited, self-regulated, brushless	Self-excited, self-regulated
Type	single-phase, synchronous	three-phase, synchronous
Insulating class	H	H
ENGINE	Gasoline, 4-Stroke, air cooled	
Type	Honda GX 390	
*Output (*Stand-by)*	8,3 kW (11,3 HP)	
Speed	3000 rpm	
Displacement	389 cm³	
Cylinders	1	
Fuel consumption	313 g/kWh	
Engine oil capacity	1,1 l	
GENERAL SPECIFICATIONS		
Tank capacity	6,5 l	
Running time	3 h	
Protection	IP 23	
*Dimensions / max. Lxwxh (mm) **	910x525x613	
Weight	85 kg	88 kg
Noise level	99 LWA (74 dB(A) - 7 m)	99 LWA (74 dB(A) - 7 m)

* Dimensions and weight are inclusive of all parts without wheels and towbar.

OUTPUT

Declared power according to ISO 3046/1 (temperature 25°C, 30% relative hummidity, altitude 100 m above sea level).
(*Stand-by) = maximum available power for use at variable loads for a yearly number of hours limited at 500 h. No overload is admitted.
(**Prime power P.R.P.) = maximum available power for use at variable loads for a yearly illimited number of hours. The average power to be taken during a period of 24 h must not be over 80% of the P.R.P. It's admitted overload of 10% each hour every 12 h.
In an **approximative** way one reduces: of 1% every 100 m altitude and of 2.5% for every 5°C above 25°C.
For possible modifications or changes to be brought on the engines, with climate conditions different from those above mentioned, please call our Assistance Authorized Centers.

ACOUSTIC POWER LEVEL

The machine respects the noise limits, expressed in sound power, given in the a.m. directives.
These limits can be used to judge the sound level produced on site.
For example: the sound power level of 100 LWA.
The sound pressure (noise produced) at 7 meters distance is about 75dBA (the limit value less 25).
To calculate the sound level at other distances use this formula:

$$dBAx = dBAy + 10 \log \frac{ry^2}{rx^2}$$

At 4 meters the noise level becomes: $75 \text{ dBA} + 10 \log \frac{7^2}{4^2} = 80 \text{ dBA}$

The generating sets GE 6000 - 6500 are units which transform the mechanical energy, generated by endothermic engine, into electric energy, through an alternator.

They are meant for industrial and professional use, powered by an endothermic engine; they are composed of various main parts such as: engine, alternator, electric and electronic controls, the fairing or a protective structure.

The assembling is made on a steel structure, on which are provided elastic support which must damp the vibrations and also eliminate sounds which would produce noise.

Technical data	GE 6000 DS-DES/GS	GE 6500 DS-DES/GS
GENERATOR		
*Three-phase generation (*Stand-by)*	–	6,5 kVA (5.2 kW) / 400 V / 9.4 A
Single-phase generation	6 kVA (5.4 kW) / 230 V / 26 A	4 kVA / 230 V / 17.4 A
Single-phase generation	6 kVA (5.4 kW) / 110 V / 54,5 A	-
Power factor (Cos φ) / Duty cycle	0.8 / 100 %	0.8 / 100 %
Frequency	50 Hz	50 Hz
ALTERNATOR	Self-excited, self-regulated, brushless	Self-excited, self-regulated
Type	single-phase, synchronous	three-phase, synchronous
Insulating class	H	H
ENGINE	Diesel, 4-Stroke, air cooled	
Type	Yanmar L100AE	
*Output (*Stand-by)*	6.5 kW (8.8 HP)	
Speed	3000 rpm	
Displacement	406 cm³	
Cylinders	1	
Fuel consumption	245 g/kWh	
Engine oil capacity	1,6 l	
GENERAL SPECIFICATIONS		
Tank capacity	5,5 l	
Running time	4,5 h	
Protection	IP 23	
*Dimensions / max. Lxwxh (mm) **	900x550x622	
Weight DS	103 Kg	107 Kg
DES	104 Kg	108 Kg
Noise level	99 LWA (74 dB(A) - 7 m)	99 LWA (74 dB(A) - 7 m)

* Dimensions and weight are inclusive of all parts without wheels and towbar.

OUTPUT

Declared power according to ISO 3046/1 (temperature 25°C, 30% relative hummidity, altitude 100 m above sea level).
(*Stand-by) = maximum available power for use at variable loads for a yearly number of hours limited at 500 h. No overload is admitted.
(**Prime power P.R.P.) = maximum available power for use at variable loads for a yearly illimited number of hours. The average power to be taken during a period of 24 h must not be over 80% of the P.R.P. It's admitted overload of 10% each hour every 12 h.
In an **approximative** way one reduces: of 1% every 100 m altitude and of 2.5% for every 5°C above 25°C.
For possible modifications or changes to be brought on the engines, with climate conditions different from those above mentioned, please call our Assistance Authorized Centers.

ACOUSTIC POWER LEVEL

The machine respects the noise limits, expressed in sound power, given in the a.m. directives.
These limits can be used to judge the sound level produced on site.
For example: the sound power level of 100 LWA.
The sound pressure (noise produced) at 7 meters distance is about 75dBA (the limit value less 25).
To calculate the sound level at other distances use this formula:

$$dBAx = dBAy + 10 \log \frac{ry^2}{rx^2}$$

At 4 meters the noise level becomes: $75 \text{ dBA} + 10 \log \frac{7^2}{4^2} = 80 \text{ dBA}$

DIMENSIONI
DIMENSIONS

SCHEMI ELETTRICI
ELECTRICAL SYSTEM

RICAMBI
SPARE PARTS

GE 7000 - 7500 BS/GS

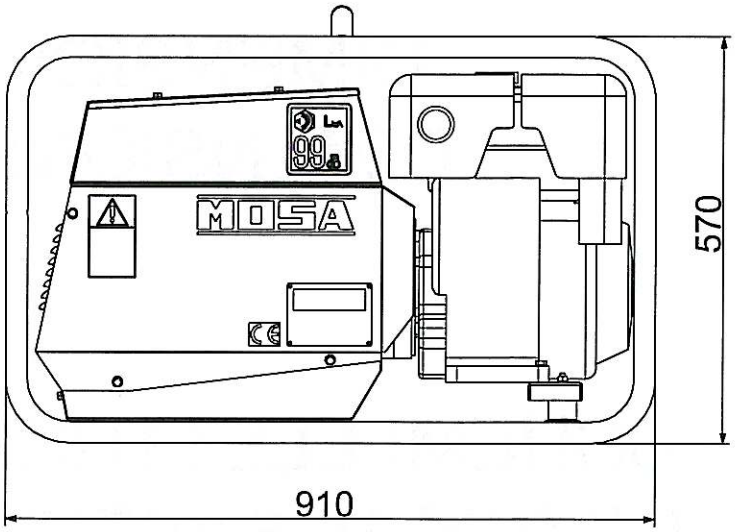

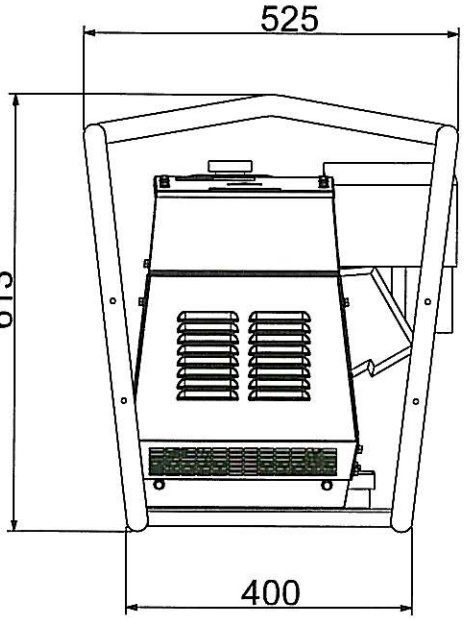

GE 6000 - 6500 DS-DES/GS

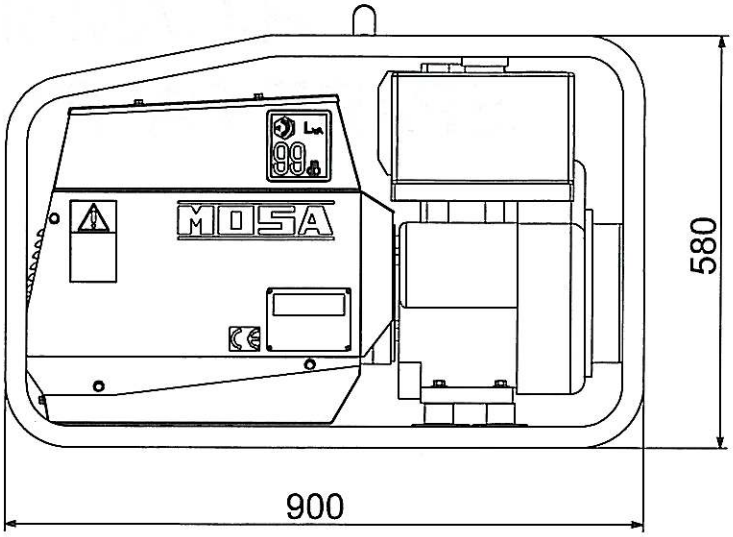

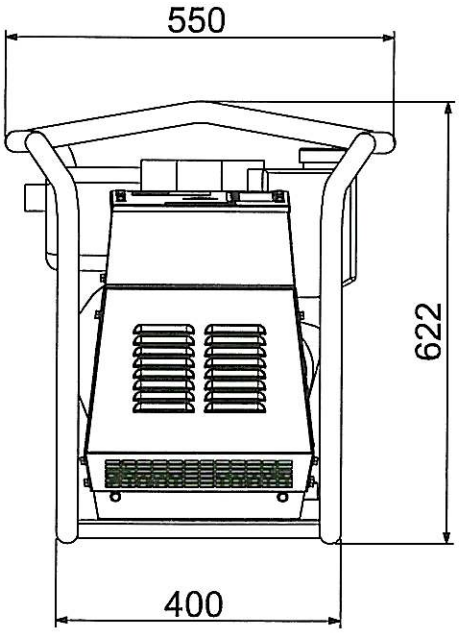

Legenda schema elettrico

A : Alternatore

C : Condensatore
D : Interruttore differenziale
G : Presa 400V trifase
H : Presa 230V monofase
I : Presa 110V monofase
M : Contaore
N : Voltmetro

N1 : Spia carica batteria
O1 : Spia pressostato
Q1 : Chiave avviamento
R1 : Motorino avviamento
S1 : Batteria
U1 : Regolatore tensione batteria

S2 : Trasmettitore livello olio
Z2 : Interruttore magnetotermico

F3 : Pulsante stop
G3 : Bobina accensione
H3 : Candela accensione

P4 : Protezione termica

Y5 : Commutatore Serie/Parallelo

Electrical system legende

A: Alternator

C: Capacitor
D: G.F.I.
G: 400V 3-phase socket
H: 230V 1phase socket
I: 110V 1-phase socket
M: Hour-counter
N: Voltmeter

N1: Battery charge warning light
O1: Oil pressure warning light
Q1: Starter key
R1: Starter motor
S1: Battery
U1: Battery charge voltage regulator

S2: Oil level transmitter
Z2: Thermal magnetic circuit breaker

F3: Stop push-button
G3: Ignition coil
H3: Spark plug

P4: Circuit breaker

Y5: Commutator/switch, series/parallel

Legende des schemas electriques

A : Alternateur

C : Condensateurs
D : Interrupteur différentiel
G : Prise 400V triphasé
H : Prise 230V monophasé
I : Prise 110V monophasé
M : Compte-heures
N : Voltmètre

N1 : Voyant charge batterie
O1 : Voyant pressostat
Q1 : Clé de démarrage
R1 : Moteur de démarrage
S1 : Batterie
U1 : Régulateur tension batterie

S2 : Transmetteur niveau huile
Z2 : Interrupteur magnétothermique

F3 : Bouton stop
G3 : Bobine allumage
H3 : Bougie allumage

P4 : Protection thermique

Y5 : Commutateur Série/Parallèle

Stromlaufplan-Referenzliste

A Generator

C Kondensatorbox
D FI-Schalter (GFI)
G Steckdose 400V 3-phasig
H Steckdose 230V 1-phasig
I Steckdose 110V 1-phasig
M Stundenzähler
N Voltmeter

N1 Warnleuchte Batterieladung
O1 Warnleuchte Öldruck
Q1 Zündschloss
R1 Anlasser
S1 Batterie
U1 Laderegler Batterie

S2 Ölstandssensor
Z2 Thermomagnetschalter (Si-Automat)

F3 Taste Stopp
G3 Zündspule
H3 Zündkerze

P4 Thermosicherung

Y5 Anzeige Wassertemperatur

Leyenda esquema eléctrico

A :Alternador

C :Condensador
D :Interruptor diferencial
G :Toma 400V trifásica
H :Toma 230V monofásica
I :Toma 110V monofásica
M :Cuentahoras
N :Voltímetro

N1 :Piloto carga batería
O1 :Piloto presostato
Q1 :Llave arranque
R1 :Motor arranque
S1 :Batería
U1 :Regulador tensión batería

S2 :Captador nivel aceite
Z2 :Interruptor magnetotérmico

F3 :Pulsador stop
G3 :Bobina encendido
H3 :Bujía encendido

P4 :Protección térmica

Y5 :Contactor Serie/Paralelo

MOTORI HONDA
HONDA ENGINES

AVVIAMENTO A STRAPPO
MANUAL RECOIL STARTER

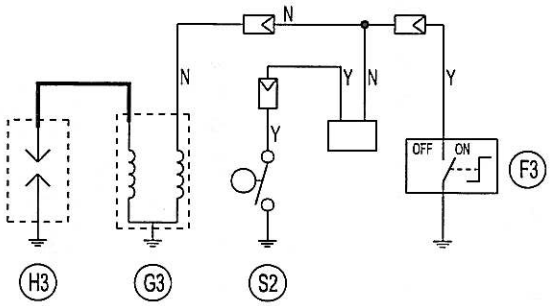

	LEGENDA COLORI KEY COLOR
B	NERO/BLACK
Y	GIALLO/YELLOW

Esp.	Modifica	Data	Dis.	Appr.

MOSA
20090-CUSAGO (MI)-ITALY

Denominazione:	Progetto:	Pag.n°	di n°
Engine Honda (manual recoil starter-oil alert)	23212.prg	2	-

Macchina:	Disegnatore:	Data:	Dis n°:	Approvato:
-	Leporace N.	20/12/2000	23212.S.010	

La MOSA si riserva a termini di legge la proprieta' del presente disegno con divieto di riprodurlo o comunicarlo a terzi senza sua autorizzazione

MOSA
©MOSA 1.0-01/04

(I) Schema elettrico (D) Stromlaufplan
(GB) Electric diagram (E) Esquema eléctrique
(F) Schema electriques (NL)

GE 7000 - 7500 BS/GS

M 61.1

15/01/04 25670-I

©MOSA 1.0-01/04

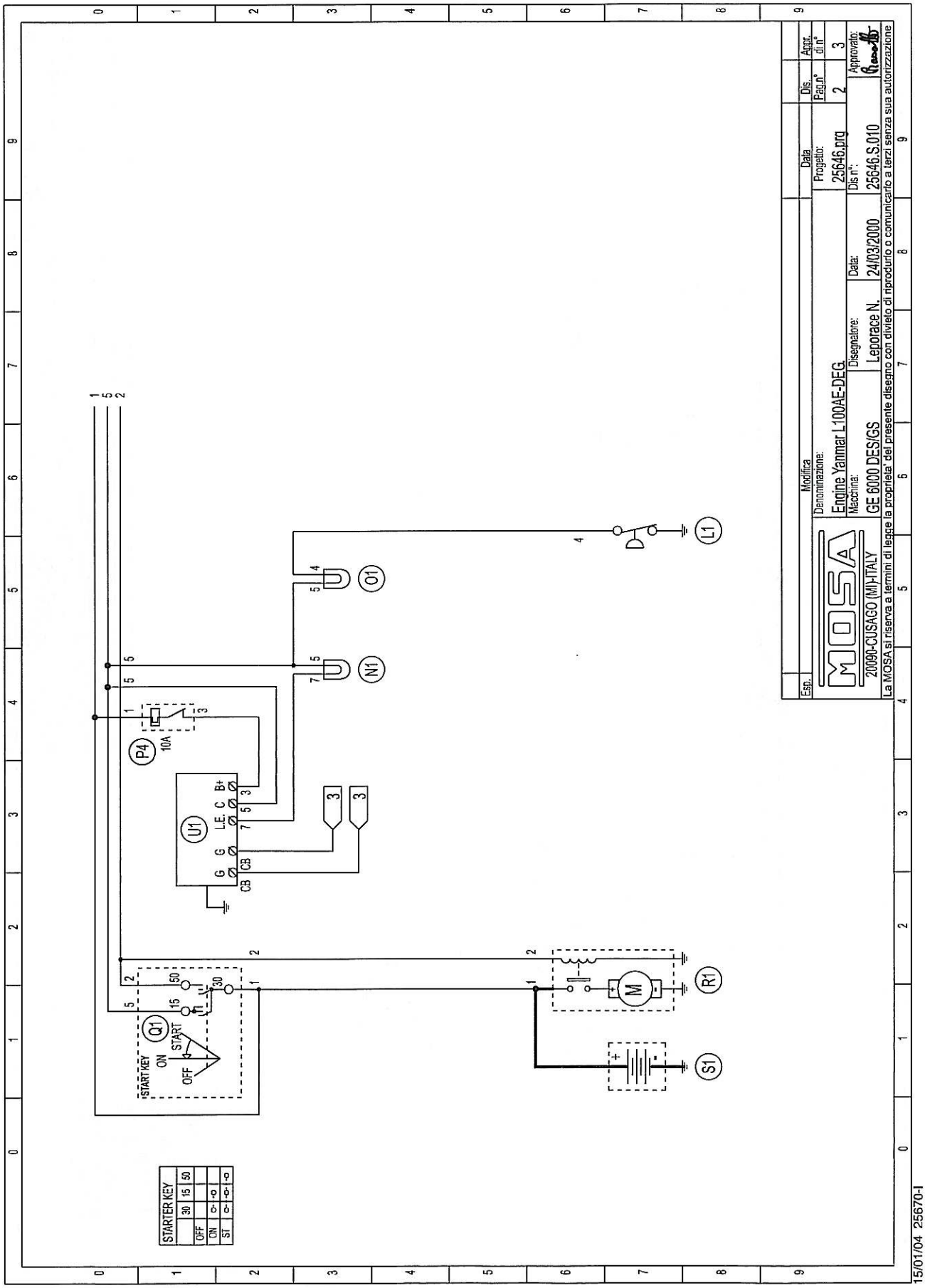

15/01/04 25670-I

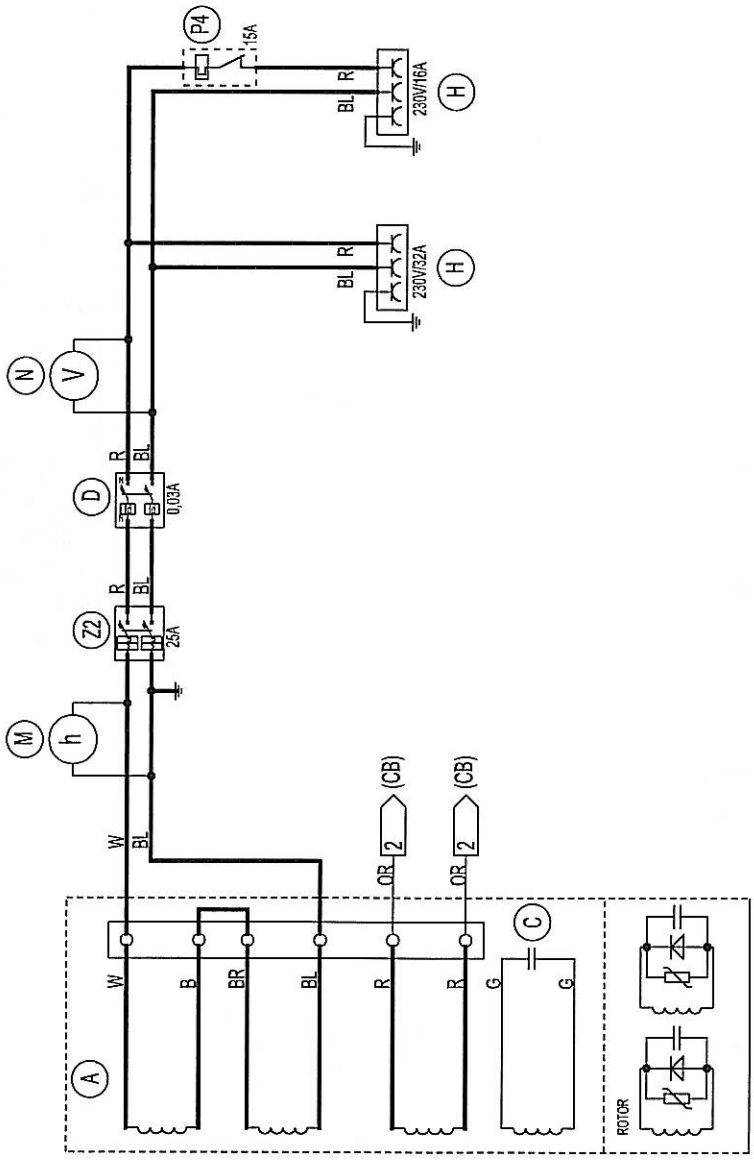

LEGENDA COLORI KEY COLOR	
R	ROSSO/RED
B	NERO/BLACK
BL	BLU/BLUE
BR	MARRONE/BROWN
G	GRIGIO/GREY
W	BIANCO/WHITE
OR	ARANCIONE/ORANGE

Modifica
Modification

Data
Date

Dis.
Dess.

Appr.
Appr.

Esp.
Exp.

Da Pag.
From Page

Denommazione:
Denomination:
Aux. (230Mx2) DMT

Progetto:
Project:
25670.prg

Pagina n°
Page n°
3 di n°
of n°
3

MOSA
20090-CUSAGO (MI)-ITALY
http://www.mosa.it

Alla Pag.
To Page

Macchina:
Machine:
GE 7000 BS/GS

Designatore:
Designer:
Leporace N.

Data:
Date:
24.10.2003

Dis. n°:
Dwg. n°:
25670.S.020

Approvato:
Approved:

La MOSA si riserva a termini di legge la proprieta' del presente disegno con divieto di riprodurlo o comunicarlo a terzi senza sua autorizzazione

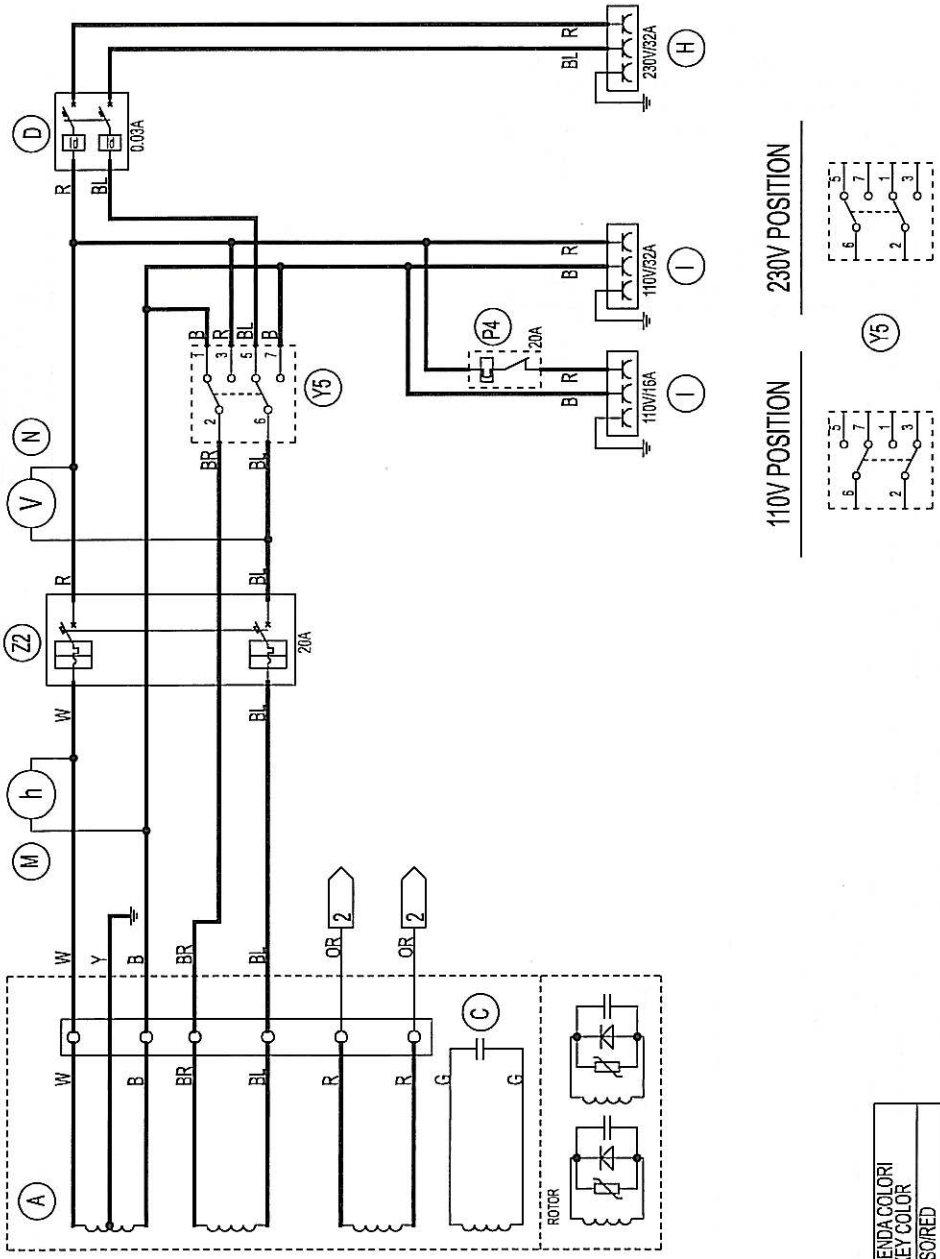

LEGENDA COLORI KEY COLOR	
R	ROSSO/RED
B	NERO/BLACK
BL	BLU/BLUE
BR	MARRONE/BROWM
G	GRIGIO/GREY
W	BIANCO/WHITE
Y	GIALLO/YELLOW
OR	ARANCIONE/ORANGE

Modifica / Modification — Data / Date — Dis. / Desi. — Appr. / Appr.

Esp. / Exp.

MOSA
20090-CUSAGO (MI)-ITALY
http://www.mosa.it

Da Pag. / From Page
Alla Pag. / To Page

Denominazione: / Denomination: Aux. (230M/110CTEx2) DMT

Macchina: / Machine: GE 7000 BS/GS

Disegnatore: / Designer: Leporace N.

Data: / Date: 27.10.2003

Progetto: / Project: 25671.prg

Dis. n°: / Dwg. n°: 25671.S.020

Pag.n° / Page n° 3 di n° / of n° 3

Approvato: / Approved:

La MOSA si riserva a termini di legge la proprieta' del presente disegno con divieto di riprodurlo o comunicarlo a terzi senza sua autorizzazione

15/01/04 25670-I

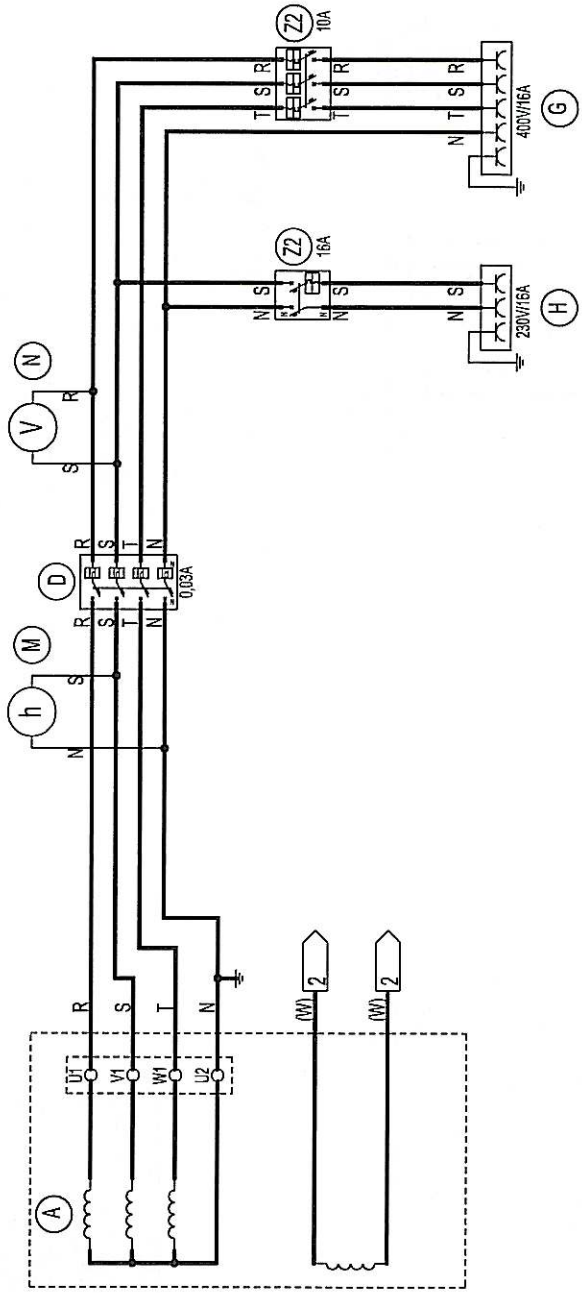

LEGENDA COLORI
KEY COLOR
(W) BIANCO/WHITE

Modifica
Modification
Data
Date
Dis.
Desi.
Appr.
Appr.
Esp.
Exp.
Da Pag.
From Page
Denominazione:
Denomination:
Aux. (400T/230M) DM
Designazione:
Designer:
Leporace N.
Data:
Date:
27.10.2003
Dis. n°:
Dwg. n°:
25680.S.020
Progetto:
Project:
Pagina n°
Page n°
di n°
of n°
Approvato:
Approved:
MOSA
20090-CUSAGO (MI)-ITALY
http://www.mosa.it
Alla Pag.
To Page
Macchina:
Machine:
GE 7500 BS/GS

La MOSA si riserva a termini di legge la proprieta' del presente disegno con divieto di riprodurlo o comunicarlo a terzi senza sua autorizzazione

La MOSA è in grado di soddisfare ogni richiesta di pezzi di ricambio.

Se si desidera mantenere in efficienza la macchina, sempre nel caso di riparazione che comportino sostituzioni di pezzi MOSA, si deve pretendere che vengano usati solo parti di ricambio originali.

Il dati richiesti si trovano sulla targa dati situata sulla struttura della macchina ben visibile e di facile consultazione ✳

Per ordinare le parti di ricambio indicare:

1) ✳ n. di matricola/serial number
2) ✳ tipo motosaldatrice e/o gruppo elettrogeno
3) ◆ n. tavola
4) ◆ n. posizione
5) quantitativo

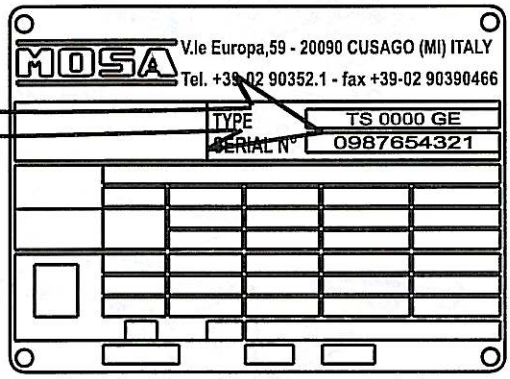

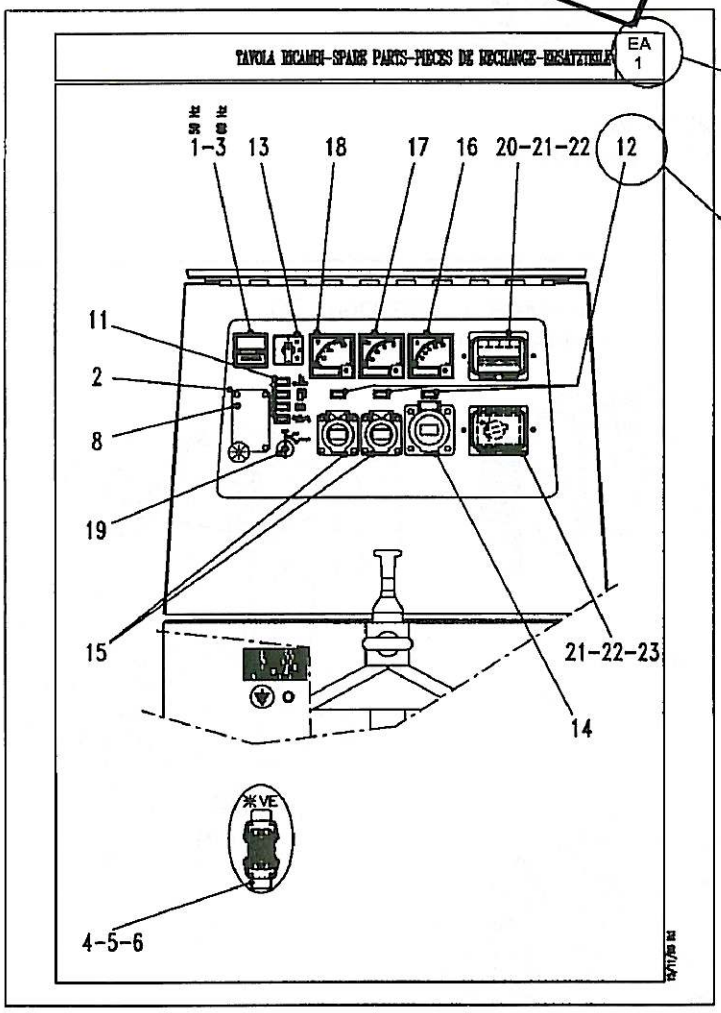

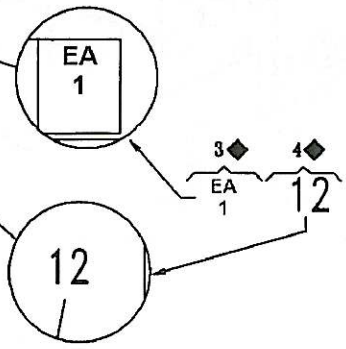

LEGENDA NOTE:

(EV) Specificare all'ordine il tipo di motorizzazione e le tensioni ausiliarie
(ER) Solo motore con avviamento a strappo
(ES) Solo motore con avviamento elettrico
(VE) Solo versione E.A.S.
(QM) Specificare all'ordine la quantità in m
(VS) Solo versioni speciali
(SR) Solo a richiesta

©MOSA 1.1-09/04

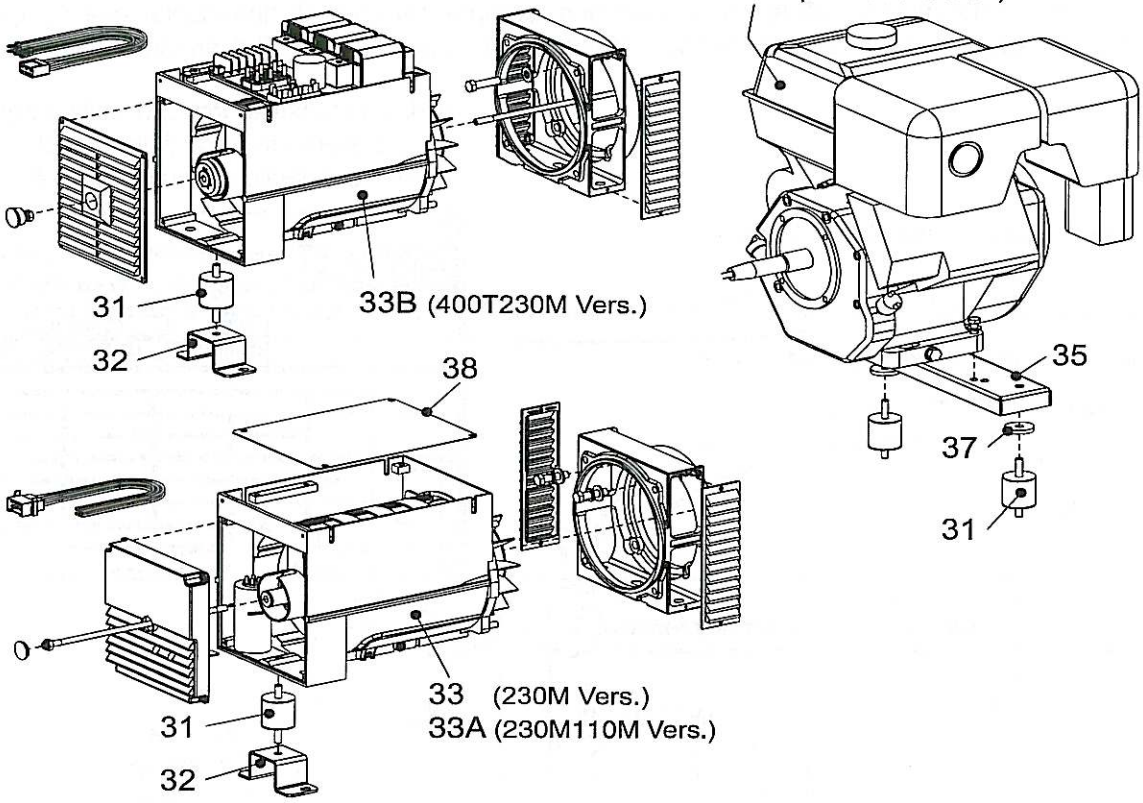
30B (HONDA GX390)
31
32
33B (400T230M Vers.)
35
37
31
38
33 (230M Vers.)
33A (230M110M Vers.)
31
32

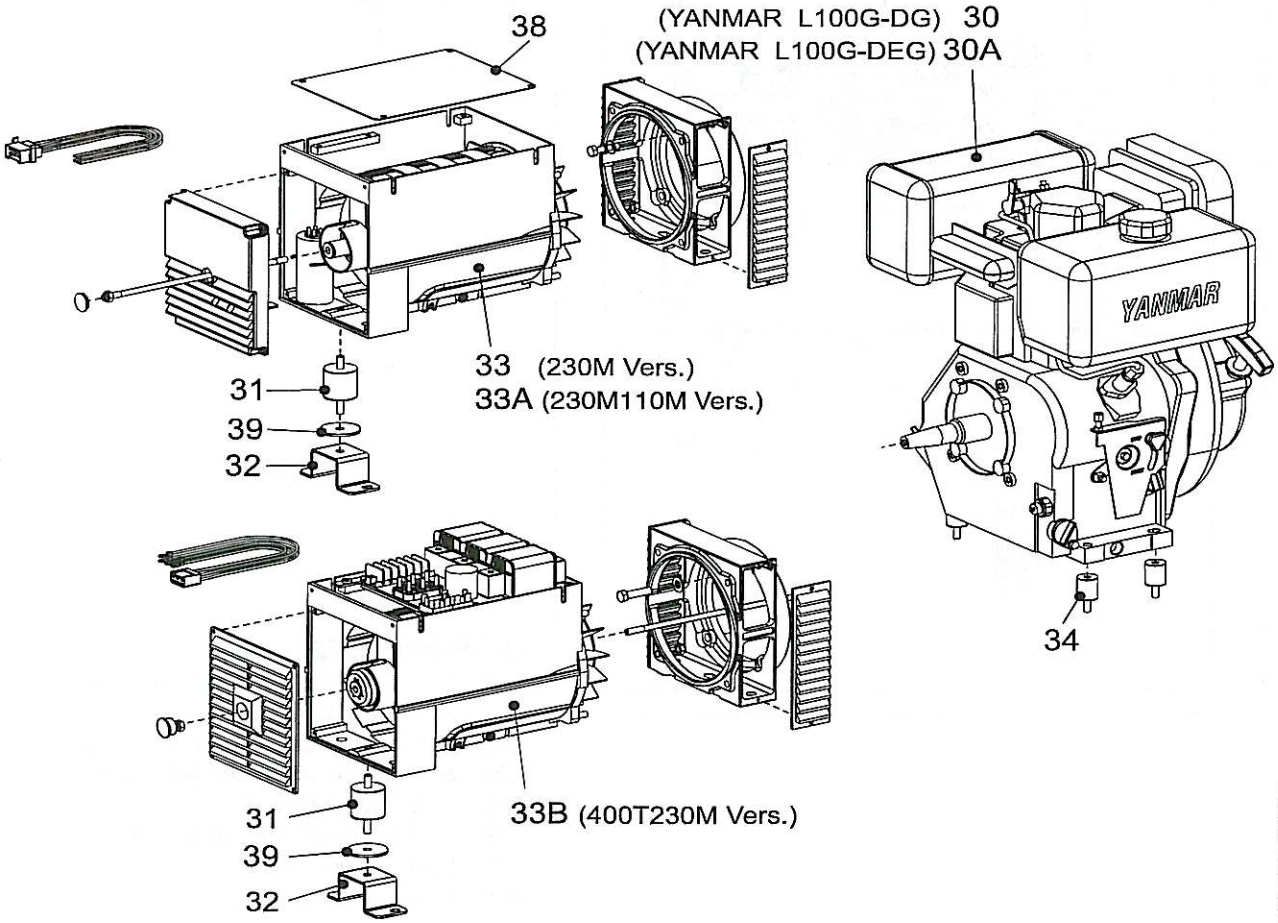
38
(YANMAR L100G-DG) 30
(YANMAR L100G-DEG) 30A
YANMAR
33 (230M Vers.)
33A (230M110M Vers.)
31
39
32
34
33B (400T230M Vers.)
31
39
32

Pos.	Rev.	Cod.	Descr.	Note
30		272702200	MOTORE YANMAR L100AE-DG	DS Version
30 a		272722200	MOTORE YANMAR L100AE-DEG	DES Version
30 b		272612200	MOTORE HONDA GX 390 K1 (VXB)	BS Version
31		102041250	ANTIVIBRANTE	
32		256703101	SUPP. ALTERNATORE	
33		256703100	ALTERNATORE	230M Version
33 a		256713100	ALTERNATORE	230M/110M Version
33 b		256803100	ALTERNATORE	400T/230M Version
34		256651035	ANTIVIBRANTE	DS-DES Version
35		272502035	TRAVERSA SUPPORTO MOTORE	BS Version
37		306202038	RONDELLA D9x35 SP5	BS Version
38		256708222	COPERTURA ALTERNATORE	230M - 230M/110M Version
39		372802038	RONDELLA DI BLOCCAGGIO	DS-DES Version

Pos.	Rev.	Cod.	Descr	
30		272702200	YANMAR ENGINE L100AE-DG	DS Version
30 a		272722200	YANMAR ENGINE L100AE-DEG	DES Version
30 b		272612200	HONDA ENGINE GX 390 K1 (VXB)	BS Version
31		102041250	VIBRATION-DAMPER	
32		256703101	ALTERNATOR SUPPORT	
33		256703100	ALTERNATOR	230M Version
33 a		256713100	ALTERNATOR	230M/110M Version
33 b		256803100	ALTERNATOR	400T/230M Version
34		256651035	VIBRATION DAMPER	DS-DES Version
35		272502035	ENGINE SUPPORT BRACKET	BS Version
37		306202038	WASHER D9x35 SP5	BS Version
38		256708222	ALTERNATOR COVER	230M - 230M/110M Version
39		372802038	STOP WASHER	DS-DES Version

©MOSA 1.1-09/04

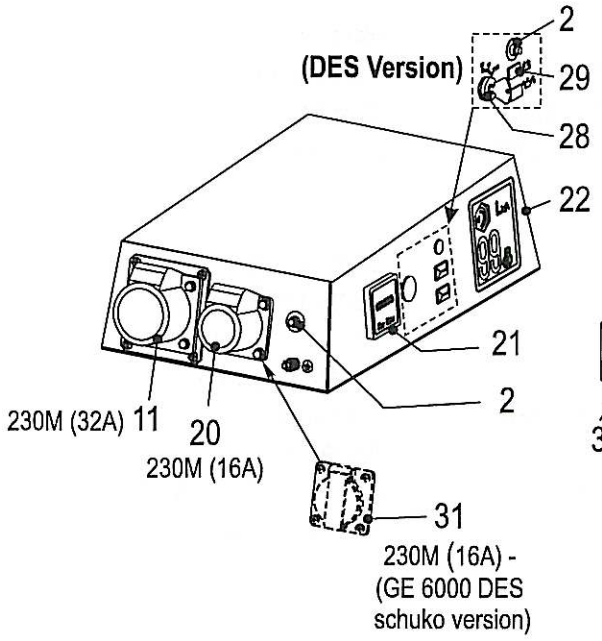
(DES Version)
2
29
28
22
21
2
230M (32A) 11
20
230M (16A)
31
230M (16A) -
(GE 6000 DES
schuko version)

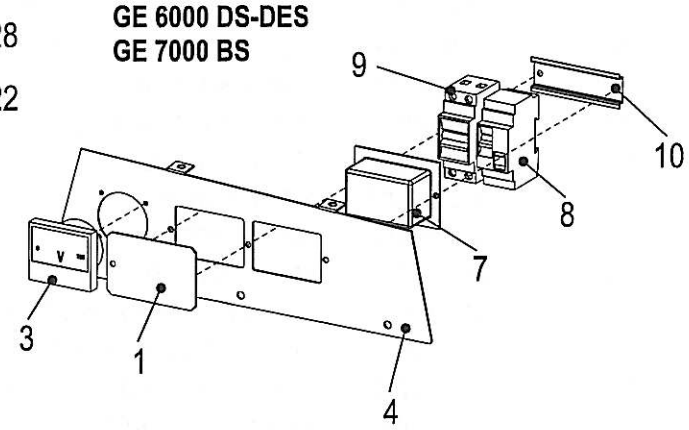
GE 6000 DS-DES
GE 7000 BS
9
10
8
7
3
1
4

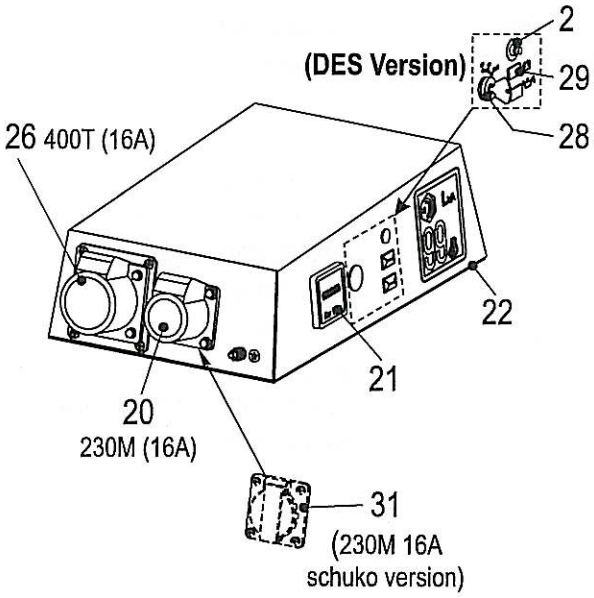
(DES Version)
2
29
28
26 400T (16A)
22
21
20
230M (16A)
31
(230M 16A
schuko version)

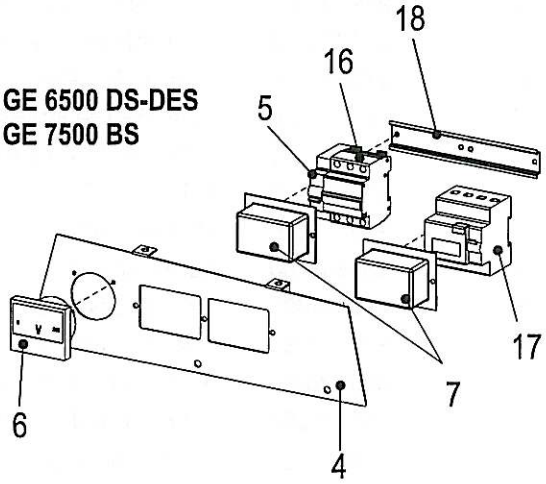
GE 6500 DS-DES
GE 7500 BS
18
16
5
17
7
6
4

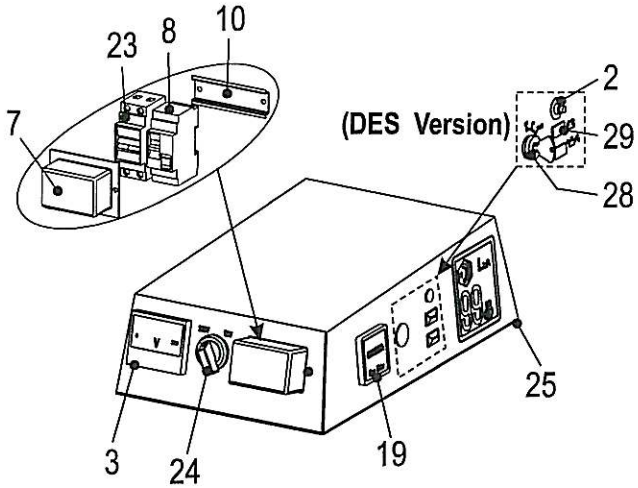
23
8
10
7
(DES Version)
2
29
28
25
3
24
19

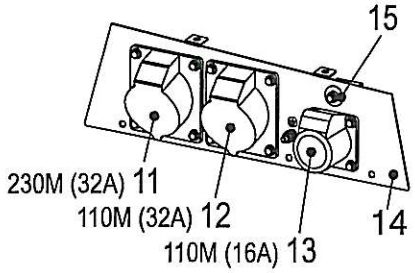
GE 6000 DS-DES
GE 7000 BS
230/110V version
15
230M (32A) 11
110M (32A) 12
110M (16A) 13
14

Pos.	Rev.	Cod.	Descr.	Note
1		357017027	PIASTRINA CHIUSURA FORO	230M Version
2		155307107	DISGIUNTORE TERMICO	
3		103011310	VOLTMETRO	230M - 230M/110M Version
4		256707020	PANNELLO FRONTALE	230M - 400T/230M Version
5		734507325	INTERRUTTORE MAGNETOTERMICO	400T/230M Version
6		105111550	VOLTMETRO FS 500V	400T/230M Version
7		232027130	CAPPUCCIO PROTEZIONE I.D.	
8		220237105	Vedi Cod.256007105	230M - 230M/110M Version
9		256707325	INT.MAGNETOTERMICO 2POLI 25A	230M Version
10		232027036	GUIDA	230M - 230M/110M Version
11		105111520	PRESA CEE 220V MONOFASE	230M - 230M/110M Version
12		105111530	PRESA CEE 32A 110V	230M/110M Version
13		307047250	PRESA 110V 16A	230M/110M Version
14		256417020	FRONTALE	230M/110M Version
15		306467107	PROTEZIONE TERMICA (AUX)	230M/110M Version
16		256557325	INTERRUTTORE MAGNETOTERMICO	400T/230M Version
17		105111540	Vedi Cod.219937105	400T/230M Version
18		1243020	GUIDA PER MORSETTIERA	400T/230M Version - (qm 0,2)
19		356317330	CONTAORE QUADRATO 110V 50Hz	230M/110M Version
20		307017240	PRESA 220V 16A	230M - 400T/230M Version
21		105511810	CONTAORE	230M - 400T/230M Version
22		256407010	SCATOLA ELETTRICA	230M - 400T/230M Version
23		256127325	INT.MAGNETOTERMICO	230M/110M Version
24		256417315	COMMUTATORE DI LINEA 25A 2POLI	230M/110M Version
25		256417010	SCATOLA ELETTRICA	230M/110M Version
26		305907270	PRESA CEE 16A 400V 3P+N+T	400T/230M Version
28		107302460	STARTER A CHIAVE	DES Version
29		1302040	SPIA 12V	DES Version
31		259107241	PRESA SCHUKO 16A 230V - 2P+T	Schuko Version

Pos.	Rev.	Cod.	Descr.	Note
1		357017027	HOLE CLOSING PLATE	230M Version
2		155307107	THERMAL SWITCH	
3		103011310	VOLTMETER	230M - 230M/110M Version
4		256707020	FRONT PANEL	230M - 400T/230M Version
5		734507325	CIRCUIT BREAKER	400T/230M Version
6		105111550	VOLTMETER FS 500V	400T/230M Version
7		232027130	CAP	
8		220237105	See Part n°256007105	230M - 230M/110M Version
9		256707325	GFI 2P. 25A	230M Version
10		232027036	FIXING GUIDE	230M - 230M/110M Version
11		105111520	EEC SOCKET SINGLE-PHASE 220V	230M - 230M/110M Version
12		105111530	SOCKET, EEC, 32A 110V	230M/110M Version
13		307047250	SOCKET 110V 16A	230M/110M Version
14		256417020	FRONT PANEL	230M/110M Version
15		306467107	THERMOPROTECTION (AUX)	230M/110M Version
16		256557325	CIRCUIT BREAKER	400T/230M Version
17		105111540	See part no. 219937105	400T/230M Version
18		1243020	TERMINAL GUIDE	400T/230M Version - (qm 0,2)
19		356317330	HOURMETER 110V 50HZ	230M/110M Version
20		307017240	EEC SOCKET 16A, 220V 2P+T	230M - 400T/230M Version
21		105511810	HOURMETER	230M - 400T/230M Version
22		256407010	ELECTRICAL BOX	230M - 400T/230M Version
23		256127325	CIRCUIT BREAKER	230M/110M Version
24		256417315	COMMUTATOR SWITCH 25A 2POLES	230M/110M Version
25		256417010	ELECTRICAL BOX	230M/110M Version
26		305907270	EEC SOCKET 16A 400V 3P+N+T	400T/230M Version
28		107302460	STARTER KEY	DES Version
29		1302040	WARNING LIGHT 12V	DES Version
31		259107241	SOCKET SCHUKO 16A 230V 2P+T	Schuko Version

©MOSA 1.1-09/04

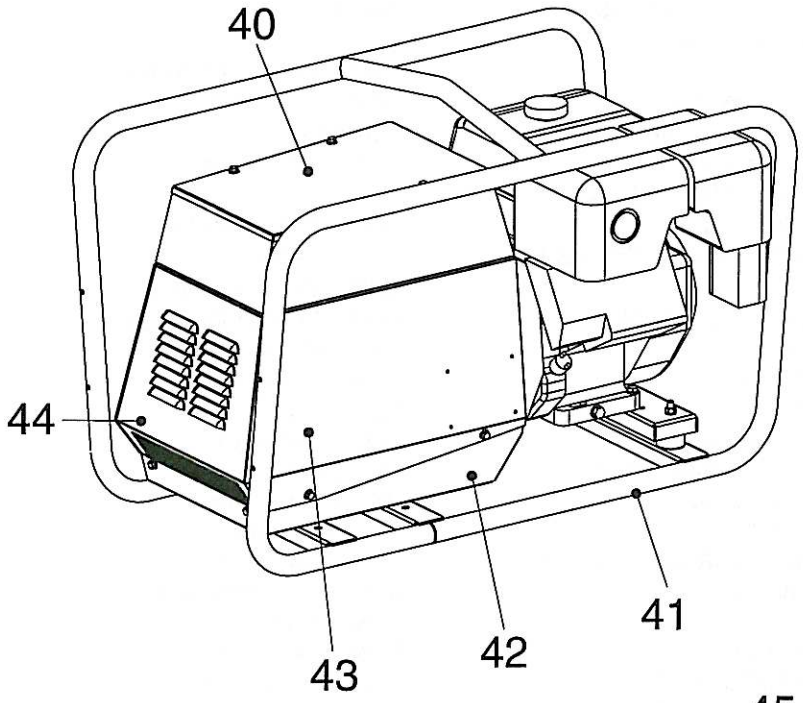

GE 7000 - 7500 BS/GS

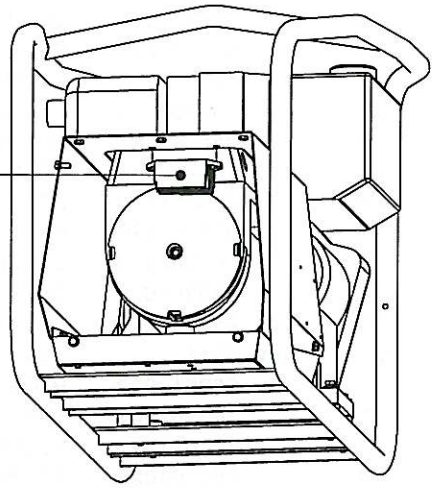

DES Version

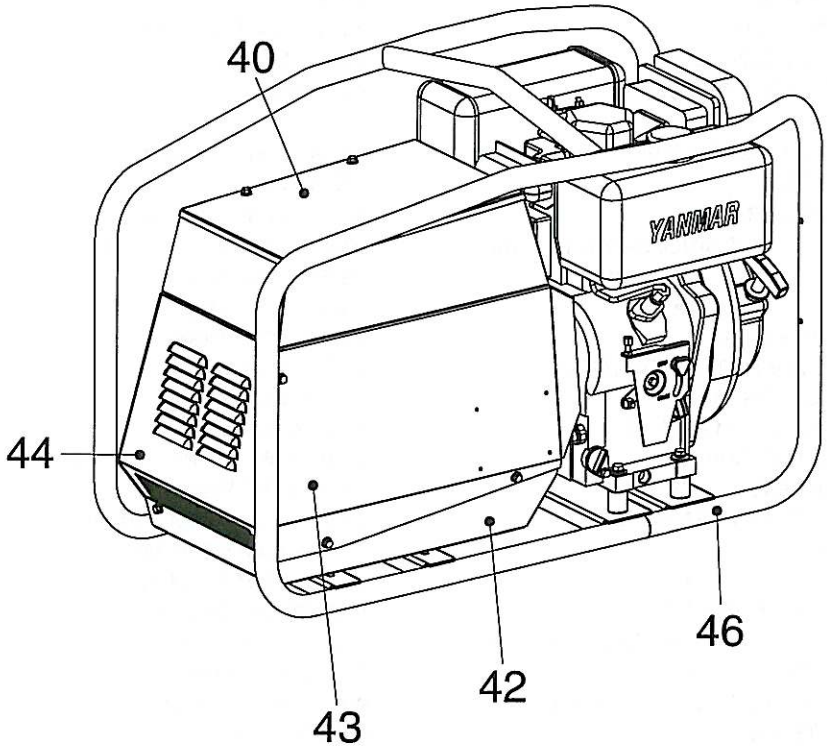

GE 6000 - 6500 DS - DES/GS

Pos.	Rev.	Cod.	Descr.	Note
40		272707015	COPERCHIO SCATOLA ELETTRICA	
41		272501050	BARELLA	BS Version
42		272708205	SCATOLA DI BASE	
43		256408005	CARENATURA	
44		272708235	GRIGLIA DI ASPIRAZIONE	
45		256022275	REGOLATORE DI TENSIONE	DES Version
46		272701050	BARELLA	DS - DES Version

Pos.	Rev.	Cod.	Descr.	Note
40		272707015	COVER ELECTRICAL BOX	
41		272501050	FRAME	BS Version
42		272708205	CASE, BOTTOM HALF	
43		256408005	COVER	
44		272708235	INTAKE GRATE	
45		256022275	VOLTAGE REGULATOR	DES Version
46		272701050	PROTECTIVE FRAME	DS - DES Version

MOSA ©MOSA 1.0-04/97	CTM 6/2 212029080	KA 3

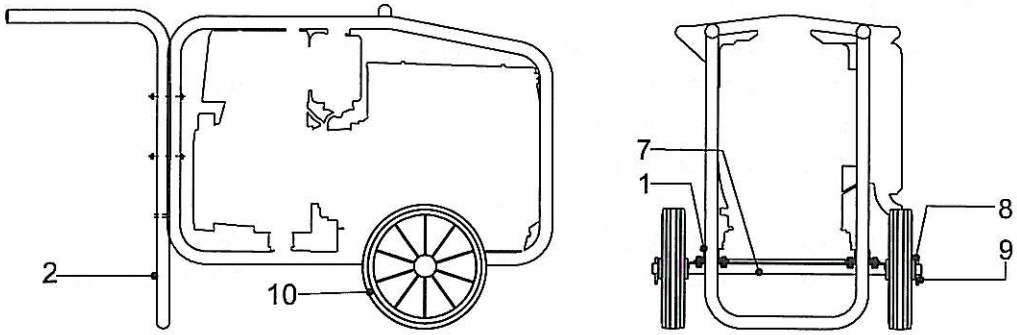

Pos.	Rev.	Cod.	Descr.	Descr.	Note
1		107012150	CAVALLOTTO	*U-BOLT*	
2		107012130	MANIGLIA	*HANDLE*	
7		205311160	ASSALE	*AXLE*	
8		205311180	RONDELLA	*WASHER*	
9		6075020	COPIGLIA	*PIN, SPLIT*	
10		105311650	RUOTA	*WHEEL*	

	CTM 200 232120130	KA 4

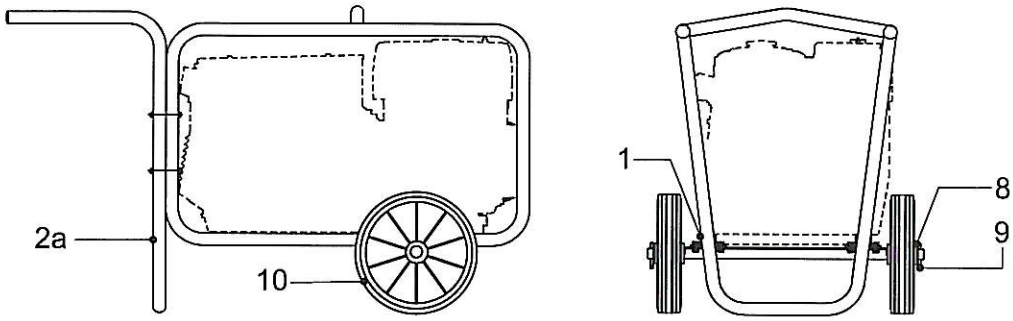

Pos.	Rev.	Cod.	Descr.	Descr.	Note
1		107012150	CAVALLOTTO	*U-BOLT*	
2a		208101051	MANIGLIA	*HANDLE*	
7		205311160	ASSALE	*AXLE*	
8		205311180	RONDELLA	*WASHER*	
9		6075020	COPIGLIA	*PIN, SPLIT*	
10		105311650	RUOTA	*WHEEL*	

	PB3 256020040	KG 3

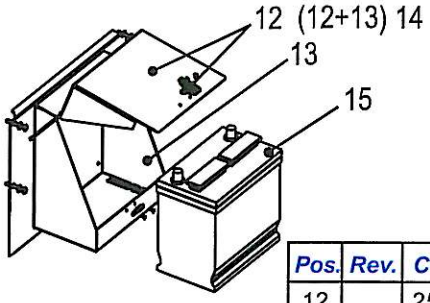

Pos.	Rev.	Cod.	Descr.	Descr.
12		256020549	GR.COPERCHIO COMPLETO	*COMPLETE COVER*
13		256029168	CESTELLO PORTA BATTERIA	*BATTERY HOLDER*
14		256029160	CESTELLO P/BATT.+COPERCHIO	*BATTERY HOLDER WITH COVER*
15		209509150	BATTERIA 45 AH	*BATTERY*

MOSA ©MOSA 1.0-12/02	(I) (GB) (F) **MODULO PER L'ORDINAZIONE DEI RICAMBI**	**R 1.1**

Gentile cliente,
potrà inviarci la richiesta per l'ordinazione di ricambi originali MOSA compilando questo modulo sia con le nuove tavole ricambi che con le vecchie, a mezzo FAX o per posta.

Richiesta da:..... **data:**..... **firma:**.....

Inviateci i seguenti ricambi della sotto elencata macchina:
RICAMBI MOSA:

modello tipo: .....

nr. matricola: | | | | | | | | | | |

NUOVE TAVOLE		
tavola nr.	posizione	q.tà

VECCHIE TAVOLE	
codice	q.tà

RICAMBI MOTORE:

modello motore: ..... **matricola motore:**.....

codice e/o posizione	descrizione e/o tavola	q.tà

RICAMBI ALTERNATORE SINCRONO:

modello alternatore:..... **matricola alternatore:**.....

codice e/o posizione	descrizione e/o tavola	q.tà

10/12/02 R1-1