*USE AND MAINTENANCE MANUAL*

# TS 300 KS
# TS 300 KSX

| | |
|---|---|
| Codice<br>Code<br>Codigo<br>Kodezahl | 373049003 |
| Edizione<br>Edition<br>Edición<br>Ausgabe | 04.2014 |

MADE IN ITALY

MOSA

**Main Characteristics of the unit:**

- Maximum welding current 300A
- Three-phase power genaration 10 kVA / monofase 5 kVA
- Diesel engine KOHLER KD 477/2
- Noise level at 7m 74 dBA (KS) - 71 dBA (KSX)
- Dimensions / weight: 1320x790x750 / 350 Kg (KS) - 370 Kg (KSX).

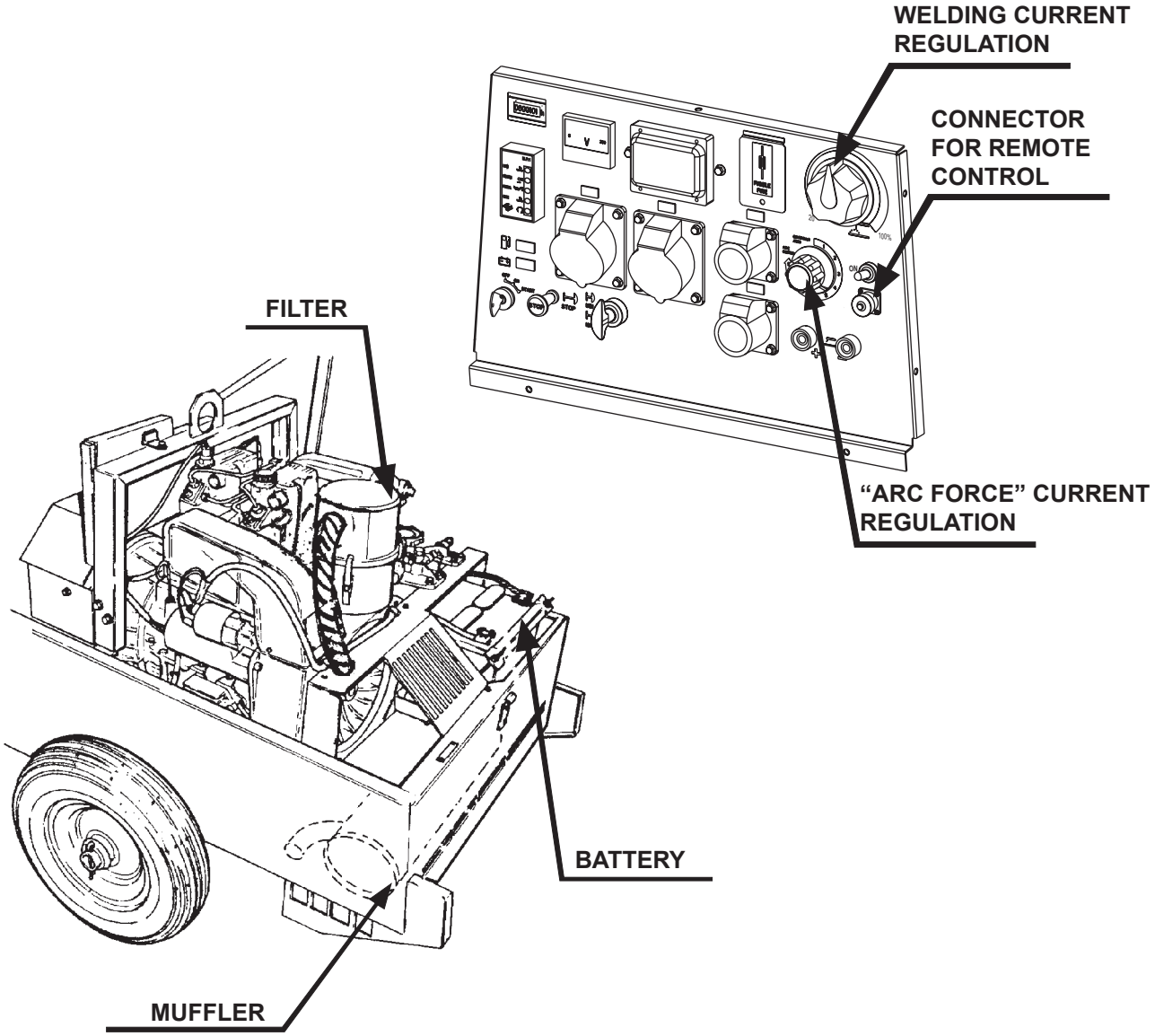


The engine driven welder has a base constructed in steel which includes the tank. A cover which is hinged to the roll bar facilitates a rapid check for daily maintenance, while a central hook on the roll bar facilitates the removal or the loading of the machine. The free maintenance battery reduces at minimum the checking of its charge condition. The engine has a low oil and a hight temperature protection. Two knobs adjust the welding current, one knob adjusts the effective current; the other one the arc force current.

M 01 QUALITY SYSTEM
M 1.01 COPYRIGHT
M 1.1 NOTES
M 1.4 CE MARK
M 1.4.1 DECLARATION OF CONFORMITY
M 1.5 TECHNICAL DATA
M 1.6 TECHNICAL DATA ENGINE DRIVEN WELDER
M 2 ADVICE
M 2.1 SYMBOLS AND SAFETY PRECAUTIONS
M 2.6 INSTALLATIONS AND ADVICE
M 2.7 INSTALLATION
M 2.7.1 DIMENSIONS
M 3 PACKING
M 4... TRANSPORT AND DISPLACEMENTS
M 6... ASSEMBLY: CT.....
M 20 SETTING-UP THE UNIT (DIESEL ENGINE)
M 21 ENGINE STARTING AND USE (DIESEL ENGINE)
M 22 STOPPING THE ENGINE (DIESEL ENGINE)
M 25 SETTING-UP THE UNIT (GASOLINE ENGINE)
M 26 STARTING THE ENGINE (GASOLINE ENGINE)
M 27 STOPPING THE ENGINE (GASOLINE ENGINE)
M 30 CONTROLS LEGEND
M 31 CONTROLS
M 34 USE AS A WELDER
M 35 USE AS AN ENGINE STARTER
M 36 USE AS A BATTERY CHARGE
M 37... USE AS A GENERATOR
M 38... USE OF THE REMOTE CONTROL
M 39... USE OF THE ENGINE PROTECTION
M 40... TROUBLE SHOOTING
M 43... MAINTENANCE
M 45 STORAGE
M 46 CAST OFF
M 55 RECOMMENDED ELECTRODES
M 60 ELECTRICAL SYSTEM LEGENDE
M 61... ELECTRICAL SYSTEM

IQNet

THE INTERNATIONAL CERTIFICATION NETWORK

CERTIFICATE

CISQ/ICIM

hereby certify that the organization

**BCS S.p.A.**

**Head Office and Operative Unit: Viale Mazzini, 161 - I-20081 Abbiategrasso (MI)**
**Operative Units:Via Valbrina, 17/19 - I-42045 Luzzara (RE)**
**Viale Europa, 59 - I-20090 Cusago (MI)**

for the following field of activities

**Design, production and servicing of tractors, agricultural and green maintenance machines, engine driven welders and generating sets.**

has implemented and maintains a

Quality Management System

which fulfills the requirements of the following standard

**ISO 9001:2008**

Issued on: **2012-03-06**
Validity date: **2015-03-05**

*Registration Number:* IT-3722

*Michael Drechsel*
*President of IQNET*

CISQ

*Gianrenzo Prati*
*President of CISQ*

IQNet Partners*:
AENOR *Spain* AFNOR Certification *France* AIB-Vinçotte International *Belgium* ANCE *Mexico* APCER *Portugal* CCC *Cyprus* CISQ *Italy* CQC *China* CQM *China* CQS *Czech Republic* Cro Cert *Croatia* DQS Holding GmbH *Germany* DS *Denmark* ELOT *Greece* FCAV *Brazil* FONDONORMA *Venezuela* ICONTEC *Colombia* IMNC *Mexico* INNORPI *Tunisia* Inspecta Certification *Finland* IRAM *Argentina* JQA *Japan* KFQ *Korea* MSZT *Hungary* Nemko AS *Norway* NSAI *Ireland* PCBC *Poland* Quality Austria *Austria* RR *Russia* SII *Israel* SIQ *Slovenia* SIRIM QAS International *Malaysia* SQS *Switzerland* SRAC *Romania* TEST St Petersburg *Russia* TSE *Turkey* YUQS *Serbia*
IQNet is represented in the USA by: AFNOR Certification, CISQ, DQS Holding GmbH and NSAI Inc.
* The list of IQNet partners is valid at the time of issue of this certificate. Updated information is available under www.iqnet-certification.com

CISQ is a member of IQNet
www.iqnet-certification.com

*IQNet, the association of the world's first class certification bodies, is the largest provider of management System Certification in the world. IQNet is composed of more than 30 bodies and counts over 150 subsidiaries all over the globe.*

ICIM
www.icim.it

CERTIFICATO n. / *CERTIFICATE No.* **0192/6**

SI CERTIFICA CHE IL SISTEMA DI GESTIONE PER LA QUALITA' DI
*WE HEREBY CERTIFY THAT THE QUALITY MANAGEMENT SYSTEM OPERATED BY*

**BCS S.p.A.**
UNITA' OPERATIVE
*OPERATIVE UNITS*

**Sede e Unità Operativa**
Viale Mazzini, 161 - 20081 Abbiategrasso (MI)
**Unità Operative**
Via Valbrina, 17/19 - 42045 Luzzara (RE)
Viale Europa, 59 - 20090 Cusago (MI)
Italia

E' CONFORME ALLA NORMA
*IS IN COMPLIANCE WITH THE STANDARD*

**UNI EN ISO 9001:2008**

PER LE SEGUENTI ATTIVITA'
*FOR THE FOLLOWING ACTIVITIES*

**EA: 18**

Progettazione, produzione ed assistenza di trattori, macchine per agricoltura e manutenzione del verde, motosaldatrici e gruppi elettrogeni.

*Design, production and servicing of tractors, agricultural and green maintenance machines, engine driven welders and generating sets.*

Riferirsi al Manuale della Qualità per l'applicabilità dei requisiti della norma di riferimento.
*Refer to Quality Manual for details of application to reference standard requirements.*
Il presente certificato è soggetto al rispetto del regolamento per la certificazione dei sistemi di gestione per la qualità delle aziende.
*The use and the validity of this certificate shall satisfy the requirements of the rules for the certification of company quality management systems.*

| Data emissione *First issue* | Emissione corrente *Current issue* | Data di scadenza *Expiring date* |
|---|---|---|
| 30/05/1994 | 06/03/2012 | 05/03/2015 |

ICIM S.p.A.
Piazza Don Enrico Mapelli, 75 – 20099 Sesto San Giovanni (MI)

ACCREDIA
ENTE ITALIANO DI ACCREDITAMENTO

SGQ N° 004A SSI N° 008G
SGA N° 005D PRD N° 004B
SCR N° 006F ISP N° 046E

Membro degli Accordi di Mutuo Riconoscimento EA, IAF e ILAC
Signatory of EA, IAF and ILAC Mutual Recognition Agreements

CISQ è la Federazione Italiana di Organismi di Certificazione dei sistemi di gestione aziendale.
*CISQ is the Italian Federation of management system Certification Bodies.*

FEDERAZIONE CISQ
www.cisq.com

ICIM CISQ IQNet
ISO 9001:2008 - Cert. 0192

## UNI EN ISO 9001 : 2008

MOSA has certified its quality system according to UNI EN ISO 9001:2008 to ensure a constant, highquality of its products. This certification covers thedesign, production and servicing of engine drivenwelders and generating sets.

The certifying institute, ICIM, which is a member ofthe International Certification Network IQNet, awarded the official approval to MOSA after anexamination of its operations at the head office andplant in Cusago (MI), Italy.

This certification is not a point of arrival but a pledgeon the part of the entire company to maintain a levelof quality of both its products and services whichwill continue to satisfy the needs of its clients, aswell as to improve the transparency and thecommunications regarding all the company's activesin accordance with the official procedures and inharmony with the MOSA Manual of Quality.

The advantages for MOSA clients are:

- Constant quality of products and services at thehigh level which the client expects;
- Continuous efforts to improve the products andtheir performance at competitive conditions;
- Competent support in the solution of problems;
- Information and training in the correct applicationand use of the products to assure the security ofthe operator and protect the environment;
- Regular inspections by ICIM to confirm that therequirements of the company's quality systemand ISO 9001 are being respected.

All these advantages are guaranteed by the CERTIFICATE OF QUALITY SYSTEM No.0192 issued by ICIM S.p.A. - Milano (Italy ) - www.icim.it

# ATTENTION

This use and maintenance manual is an important part of the machines in question.
The assistance and maintenance personel must keep said manual at disposal, as well as that for the engine and alternator (if the machine is synchronous) and all other documentation about the machine.

We advise you to pay attention to the pages concerning the security (see page M1.1).

© All rights are reserved to said Company.

It is a property logo of MOSA division of B.C.S. S.p.A. All other possible logos contained in the documentation are registered by the respective owners.

☞ The reproduction and total or partial use, in any form and/or with any means, of the documentation is allowed to nobody without a written permission by MOSA division of B.C.S. S.p.A.

To this aim is reminded the protection of the author's right and the rights connected to the creation and design for communication, as provided by the laws in force in the matter.

In no case MOSA division of B.C.S. S.p.A. will be held responsible for any damaga, direct or indirect, in relation with the use of the given information.

MOSA division of B.C.S. S.p.A. does not take any responsibility about the shown information on firms or individuals, but keeps the right to refuse services or information publication which it judges discutible, unright or illegal.

## INFORMATION

Dear Customer,
We wish to thank you for having bought a high quality set.

Our sections for Technical Service and Spare Parts will work at best to help you if it were necessary.

To this purpose we advise you, for all control and overhaul operations, to turn to the nearest authorized Service Centre, where you will obtain a prompt and specialized intervention.

☞ In case you do not profit on these Services and some arts are replaced, please ask and be sure that are used exclusively original parts; this to guarantee that the performances and the initial safety prescribed by the norms in force are re-established.

☞ *The use of **non original spare parts will cancel immediately** any guarantee and Technical Service obligation.*

## NOTES ABOUT THE MANUAL

Before actioning the machine please read this manual attentively. Follow the instructions contained in it, in this way you will avoid inconveniences due to negligence, mistakes or incorrect maintenance. The manual is for qualified personnel, who knows the rules: about safety and health, installation and use of sets movable as well as fixed.

You must remember that, in case you have difficulties for use or installation or others, our Technical Service is always at your disposal for explanations or interventions.

The manual for Use Maintenance and Spare Parts is an integrant part of the product. It must be kept with care during all the life of the product.
In case the machine and/or the set should be yielded to another user, this manual must also given to him.
Do not damage it, do not take parts away, do not tear pages and keep it in places protected from dampness and heat.

You must take into account that some figures contained in it want only to identify the described parts and therefore might not correspond to the machine in your possession.

## INFORMATION OF GENERAL TYPE

In the envelope given together with the machine and/or set you will find: the manual for Use Maintenance and Spare Parts, the manual for use of the engine and the tools (if included in the equipment), the guarantee (in the countries where it is prescribed by law).

The Manufacturer shall not be liable for ANY USE OF THE PRODUCT OTHER THAN THAT PRECISELY SPECIFIED IN THIS MANUAL and is thus not liable for any risks which may occur as a result of IMPROPER USE. The Company does not assume any liability for any damage to persons, animals or property.

Our products are made in conformity with the safety norms in force, for which it is advisable to use all these devices or information so that the use does not bring damage to persons or things.

While working it is advisable to keep to the personal safety norms in force in the countries to which the product is destined (clothing, work tools, etc.).

Do not modify for any motive parts of the machine (fastenings, holes, electric or mechanical devices, others..) if not duly authorized in writing: the responsibility coming from any potential intervention will fall on the executioner as in fact he becomes maker of the machine.

☞ ***Notice:*** *the manufacturer, who keeps the faculty, apart the essential characteristics of the model here described and illustrated, to bring betterments and modifications to parts and accessories, without putting this manual uptodate immediately.*

Any of our product is labelled with CE marking attesting its conformity to appliable directives and also the fulfillment of safety requirements of the product itself; the list of these directives is part of the declaration of conformity included in any machine standard equipment.
Here below the adopted symbol:

CE marking is clearly readable and unerasable and it can be either part of the data-plate.

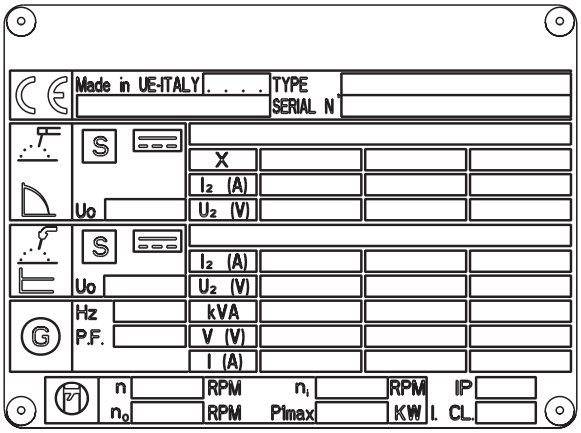


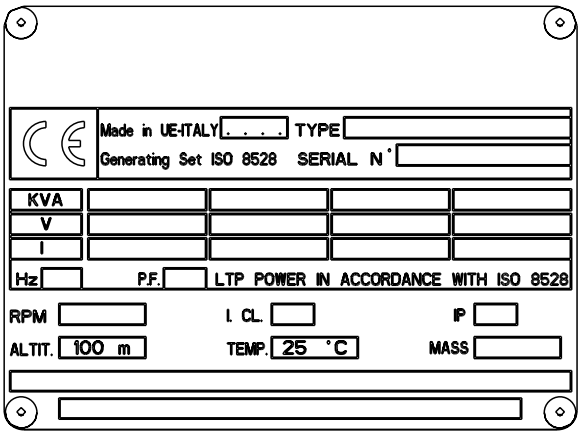


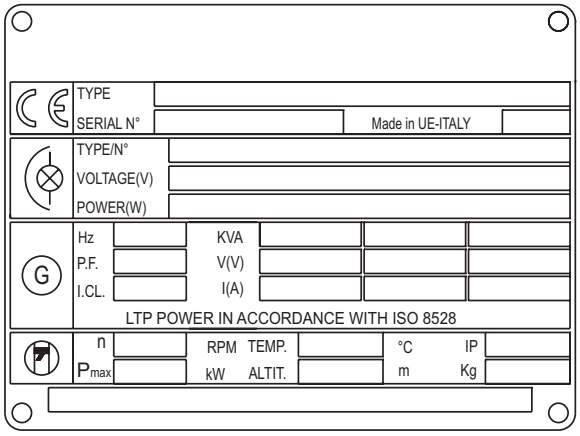


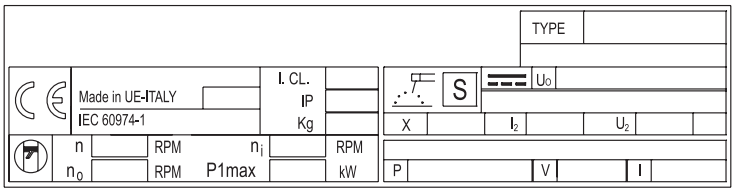


Furthermore, on each model it is shown the noise level value; the symbol used is the following:

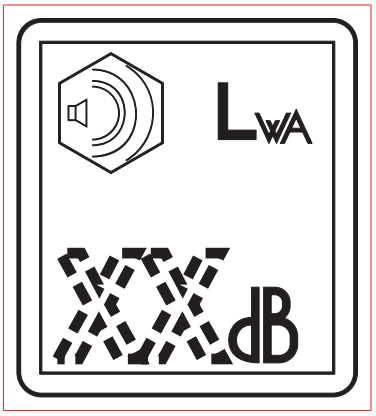


The indication is shown in a clear, readable and indeleble way on a sticker.

| | | |
|---|---|---|
| (I) Dichiarazione conformità (D) Konformitätserklärung<br>(GB) Declaration of conformity (E) Declaración de conformidad<br>(F) Déclaration de conformité (PT) Declaração de conformidade | | M<br>1.4.1<br>REV.2-10/13 |


**BCS S.p.A.**
Sede legale:
Via Marradi 1
20123 Milano - Italia

**Stabilimento di Cusago, 20090 (Mi) - Italia**
V.le Europa 59
Tel.: +39 02 903521
Fax: +39 02 90390466


ISO 9001:2008 - Cert. 0192

# DICHIARAZIONE DI CONFORMITA'

CE

Déclaration de Conformité – Declaration of Conformity – Konformitätserklärung
Conformiteitsverklaring – Declaración de Conformidad

BCS S.p.A. dichiara sotto la propria responsabilità che la macchina:
BCS S.p.A. déclare, sous sa propre responsabilité, que la machine:
BCS S.p.A. declares, under its own responsibility, that the machine:
BCS S.p.A. erklärt, daß die Aggregate:
BCS S.p.A. verklaard, onder haar eigen verantwoordelijkheid, dat de machine:
BCS S.p.A. declara bajo su responsabilidad que la máquina:

GRUPPO ELETTROGENO DI SALDATURA / WELDING GENERATOR ☐

GRUPPO ELETTROGENO / POWER GENERATOR ☐

TORRE FARO / LIGHTING TOWER ☐

Marchio / Brand :

Modello / Model :

Matricola / Serial number :

FAC SIMILE

è conforme con quanto previsto dalle Direttive Comunitarie e relative modifiche:
est en conformité avec ce qui est prévu par les Directives Communautaires et relatives modifications:
conforms with the Community Directives and related modifications:
mit den Vorschriften der Gemeinschaft und deren Ergänzungen übereinstimmt:
in overeenkomst is met de inhoud van gemeenschapsrichtlijnemen gerelateerde modificaties:
comple con los requisítos de la Directiva Comunitaria y sus anexos:

**2006/42/CE - 2006/95/CE - 2004/108/CE**

Nome e indirizzo della persona autorizzata a costituire il fascicolo tecnico :
Nom et adresse de la personne autorisée à composer le Dossier Technique :
Person authorized to compile the technical file and address :
Name und Adresse der zur Ausfüllung der technischen Akten ermächtigten Person :
Persoon bevoegd om het technische document , en bedrijf gegevens in te vullen
Nombre y dirección de la persona autorizada a componer el expediente técnico :

**ing. Benso Marelli - Consigliere Delegato / Managing Director ; V.le Europa 59, 20090 Cusago (MI) – Italy**

Cusago,

Ing. Benso Marelli
Consigliere Delegato
Managing Director

MM 083.1

04/06/10 M1.4.1

The TS 300 engine driven welder ia a unit which ensures the function as:
a) a current source for arc welding
b) a current source for the auxiliary power generation
It is meant for industrial and professional use, powered by an endothermic engine; it is composed of various main parts such as: engine, alternator, electric and electronic controls, the fairing or a protective structure.
The assembling is made on a steel structure, on which are provided elastic support which must damp the vibrations and also eliminate sounds which would produce noise.

| Technical data | TS 300 KS | TS 300 KSX |
|---|---|---|
| **ALTERNATOR** | self-excited, self-regulated, brushless | |
| **Type** | Three-phase, asynchronous | |
| **Insulating class** | H | |
| **A.C. GENERATORA.** | | |
| **Three-phase generation** | 10 kVA / 400 V / 14.4 A | |
| **Single-phase generation** | 5 kVA / 230 V / 21.7 A | |
| **Single-phase generation** | 2.5 kVA / 110 V / 22.7 4 | |
| **Single-phase generation** | 5 kVA / 48 V / 104 A | |
| **Frequency** | 50 Hz | |
| **ENGINE** | | |
| **Mark / Model** | KOHLER KD 477/2 | |
| **Type / Cooling system** | Diesel 4-Stroke / Air | |
| **Cylinders / Displacement** | 2 / 954 $cm^3$ | |
| **Net output** | 14.9 kW (20.3 HP) | |
| **Speed** | 3000 rpm | |
| **Fuel consumption (welder 60%)** | 2.5 l/h | |
| **Engine oil capacity** | 3 l | |
| **Starter** | Electric | |
| **GENERAL SPECIFICATIONS** | | |
| **Battery** | 12V - 45Ah | |
| **Tank capacity** | 23 l | |
| **Running time (welder 60%)** | 9.2 h | |
| **Protection** | IP 23 | |
| **Dimensions / max. (Lxlxh in mm)** | 1320x790x750 | |
| **Dimensions with CTM** | 1630x920x930 | |
| **Dimensions with CTL** | 2050x980x990 | |
| **Weight** | 350 Kg | 370 Kg |
| **Weight with CTM** | 370 Kg | 390 Kg |
| **Weight with CTL** | 410 Kg | 440 Kg |
| **Acoustic power LwA (pression LpA)** | 99 dB(A) (74 dB(A) @ 7m) | - |
| **Measured acoustic power LwA (pression LpA)** | - | 96 dB(A)(71 dB(A) @ 7m) |
| **Guaranteed acoustic power LwA (pression LpA)** | - | 97 dB(A)(72 dB(A) @ 7m) |

## POWER

Declared power according to ISO 3046-1 (temperature 25°C, 30% relative hummidity, altitude 100 m above sea level).
It's admitted overload of 10% each hour every 12 h.
In an **approximative** way one reduces: of 1% every 100 m altitude and of 2.5% for every 5°C above 25°C.

## ACOUSTIC POWER LEVEL

**ATTENTION:** The concrete risk due to the machine depends on the conditions in which it is used. Therefore, it is up to the end-user and under his direct responsibility to make a correct evaluation of the same risk and to adopt specific precautions (for instance, adopting a I.P.D. -Individual Protection Device)

**Acoustic Noise Level ($L_{WA}$) - Measure Unit dB(A):** it stands for acoustic noise released in a certain delay of time. This is not submitted to the distance of measurement.

**Acoustic Pressure (Lp) - Measure Unit dB(A):** it measures the pressure originated by sound waves emission. Its value changes in proportion to the distance of measurement.

The here below table shows examples of acoustic pressure (Lp) at different distances from a machine with Acoustic Noise Level ($L_{WA}$) of 95 dB(A)

Lp a 1 meter = 95 dB(A) - 8 dB(A) = 87 dB(A)
Lp a 4 meters = 95 dB(A) - 20 dB(A) = 75 dB(A)
Lp a 7 meters = 95 dB(A) - 25 dB(A) = 70 dB(A)
Lp a 10 meters = 95 dB(A) - 28 dB(A) = 67 dB(A)

**PLEASE NOTE:** the symbol when with acoustic noise values, indicates that the device respects noise emission limits according to 2000/14/CE directive.

| Technical data | TS 300 KS | TS 300 KSX |
|---|---|---|
| **D.C. WELDING C.C.** | | |
| Welding current regulation (I Scale) | 20 - 300 A | |
| Service | 300 A - 60%, 250 A - 100% | |
| Regulation of welding * | 0 - 9 | |
| Open circuit voltage | 70 V | |
| Welding voltage | 20 - 32 V | |

## OUTPUT CARACTERISTIC

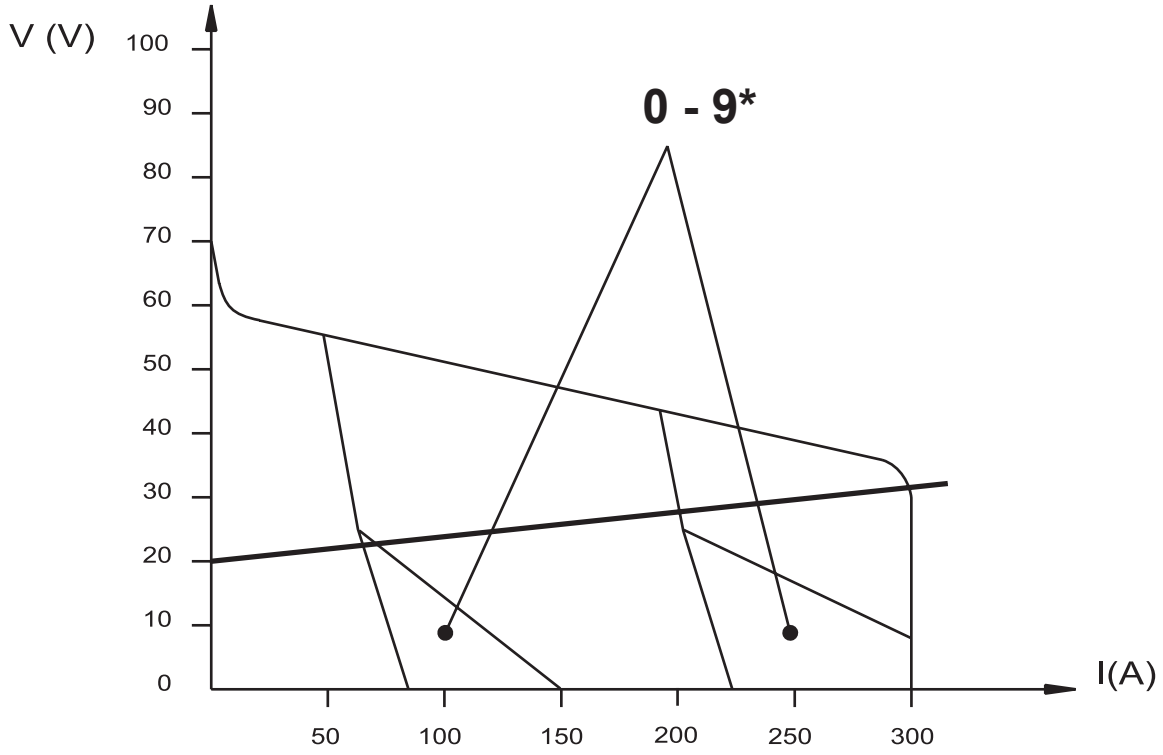


| Welding current regulator position | % | 0 | 25 | 50 | 75 | 100 |
|---|---|---|---|---|---|---|
| approx. current values | A | 20 | 80 | 150 | 240 | 300 |

**SIMULTANEOUS UTILIZATION FACTORS**

In case **Welding** and **Generation** can be used simultaneously, however, the engine **cannot** be overloaded. The table below gives the maximum limits to be respected:

| WELDING CURRENT | >170 A | 130 A | 80 A | 0 A |
|---|---|---|---|---|
| AUXILIARY POWER | 0 | 2.5 kVA | 5 kVA | 10 kVA |

The installation and general warnings regarding operations are aimed achieving correct use of the machine and/or apparatus in the place where it is used as a genset and/or motor welder.
- Advice to the User about the safety:

☞ NB: The information contained in the manual can be changed without notice.
Any damage caused in connection with the use of these instructions shall not be considered as they are only indicative.
Remember that the non observance of the indications reported by us might cause damage to persons or things. It is understood, that local dispositions and/or laws must be respected.

| | |
|---|---|
| ⚠ **DANGEROUS** | This heading warns of an immediate danger for persons as well for things. Not following the advice can result in serious injury or death. |
| ⚠ **WARNING** | This heading warns of situations which could result in injury for persons or damage to things. |
| ⚠ **CAUTION** | To this advice can appear a danger for persons as well as for things, for which can appear situations bringing material damage to things. |
| ⚠ **IMPORTANT**<br>⚠ **NOTE**<br>⚠ **ATTENTION** | These headings refer to information which will assis you in the correct use of the machine and/or accessories. |

☞ **FIRST AID.** In case the operator shold be sprayed by accident, from corrosive liquids a/o hot toxic gas or whatever event which may cause serious injuries or death, predispose the first aid in accordance with the ruling labour accident standards or of local instructions.

| | |
|---|---|
| Skin contact | Wash with water and soap |
| Eyes contact | Irrigate with plenty of water, if the irritation persists contact a specialist |
| Ingestion | Do not induce vomit as to avoid the intake of vomit into the lungs, send for a doctor |
| Suction of liquids from lungs | If you suppose that vomit has entered the lungs (as in case of spontaneous vomit) take the subject to the hospital with the utmost urgency |
| Inhalation | In case of exposure to high concentration of vapours take immediately to a non polluted zone the person involved |

☞ **FIRE PREVENTION.** In case the working zone,for whatsoever cause goes on fire with flames liable to cause severe wounds or death, follow the first aid as described by the ruling norms or local ones.

| EXTINCTION MEANS | |
|---|---|
| Appropriated | Carbonate anhydride (or carbon dioxyde) powder, foam, nebulized water |
| Not to be used | Avoid the use of water jets |
| Other indications | Cover eventual shedding not on fire with foam or sand, use water jets to cool off the surfaces close to the fire |
| Particular protection | Wear an autorespiratory mask when heavy smoke is present |
| Useful warnings | Avoid, by appropriate means to have oil sprays over metallic hot surfaces or over electric contacts (switches,plugs,etc.). In case of oil sprinkling from pressure circuits, keep in mind that the inflamability point is very low. |

## SYMBOLS

***STOP*** **-** Read absolutely and be duly attentive

Read and pay due attention

***GENERAL ADVICE*** **-** If the advice is not respected damage can happen to persons or things.

***HIGH VOLTAGE*** **-** Attention High Voltage. There can be parts in voltage, dangerous to touch. The non observance of the advice implies life danger.

***FIRE*** **-** Danger of flame or fire. If the advice is not respected fires can happen.

***HEAT*** **-** Hot surfaces. If the advice is not respected burns or damage to things can be caused.

***EXPLOSION*** **-** Explosive material or danger of explosion. in general. If the advice is not respected there can be explosions.

***WATER*** **-** Danger of shortcircuit. If the advice is not respected fires or damage to persons can be caused.

***SMOKING*** **-** The cigarette can cause fire or explosion. If the advice is not respected fires or explosions can be caused.

***ACIDS*** **-** Danger of corrosion. If the advice is not respected the acids can cause corrosions with damage to persons or things.

***WRENCH*** **-** Use of the tools. If the advice is not respected damage can be caused to things and even to persons.

***PRESSION*** **-** Danger of burns caused by the expulsion of hot liquids under pressure.

***ACCES FORBIDDEN*** *to non authorized* peaple.

## PROHIBITIONS No harm for persons

***Use only with safety clothing -***

It is compulsory to use the personal protection means given in equipment.

***Use only with safety clothing -***

It is compulsory to use the personal protection means given in equipment.

***Use only with safety protections -***

It is a must to use protection means suitable for the different welding works.

***Use with only safety material -***

It is prohibited to use water to quench fires on the electric machines.

***Use only with non inserted voltage -***

It is prohibited to make interventions before having disinserted the voltage.

***No smoking -***

It is prohibited to smoke while filling the tank with fuel.

***No welding -***

It is forbidden to weld in rooms containing explosive gases.

## ADVICE <u>No harm for persons and things</u>

***Use only with safety tools, adapted to the specific use -***

It is advisable to use tools adapted to the various maintenance works.

***Use only with safety protections, specifically suitable***

It is advisable to use protections suitable for the different welding works.

***Use only with safety protections -***

It is advisable to use protections suitable for the different daily checking works.

***Use only with safety protections -***

It is advisable to use all protections while shifting the machine.

***Use only with safety protections -***

It is advisable to use protections suitable for the different daily checking works.and/or of maintenance.

## INSTALLATION AND ADVICE BEFORE USE

The operator of the welder is responsible for the security of the people who work with the welder and for those in the vicinity.
The security measures must satisfy the rules and regulations for engine driven welders.
The information given below is in addition to the local security norms.

Estimate possible electromagnetic problems in the work area taking into account the following indications.

1. Telephonic wirings and/or of communication, check wirings and so on, in the immediate vicinity.
2. Radio and television receptors and transmettors.
3. Computer and other checking devices.
4. Critical devices for safety and/or for industrial checks.
5. Peapol who, for instance, use pace-maker, hearing-aid for deaf or something and else.
6. Devices used for rating and measuring.
7. The immunity of other devices in the operation area of the welder. Make sure that other used devices are compatible. If it is the case, provide other additional measures of protection.
8. The daily duration of the welding time.

Make sure that the area is safe before starting any welding operation.

- Do not touch any bare wires, leads or contacts as they may be live and there is danger of electric shock which can cause death or serious burns. The electrode and welding cables, etc. are live when the unit is operating.
- Do not touch any electrical parts or the electrode while standing in water or with wet hands, feet or clothes.
- Insulate yourself from the work surface while welding. Use carpets or other insulating materials to avoid physical contact with the work surface and the floor.
- Always wear dry, insulating glovers, without holes, and body protection.
- Do not wind cables around the body.
- Use ear protections if the noise level is high.
- Keep flamable material away from the welding area.
- Do not weld on containers which contain flamable material.
- Do not weld near refuelling areas.
- Do not weld on easily flamable surfaces.
- Do not use the welder to defrost (thaw) pipes.
- Remove the electrode from the electrode holder, when not welding.
- Avoid inhaling fumes by providing a ventilation system or, if not possible, use an approved air breather.
- Do not work in closed areas where there is no fresh air flow.
- Protect face and eyes (protective mask with suitable dark lens and side screens), ears and body (non-flamable protective clothers).

# INSTALLATION AND ADVICE BEFORE USE

## GASOLINE ENGINES

☞ Use in open space, air swept or vent exhaust gases, which contain the deathly carbone oxyde, far from the work area.

## DIESEL ENGINES

☞ Use in open space, air swept or vent exhaust gases far from the work area.

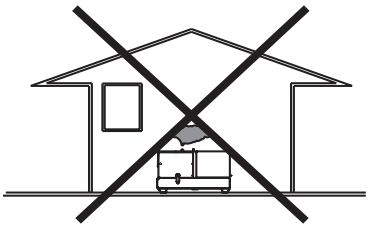

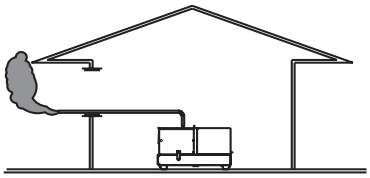

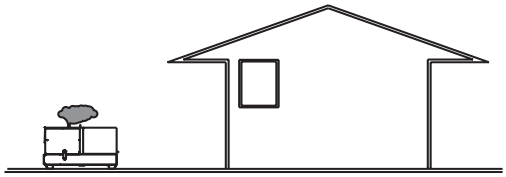

## POSITION

Place the machine on a level surface at a distance of at least 1,5 m from buildings or other plants.

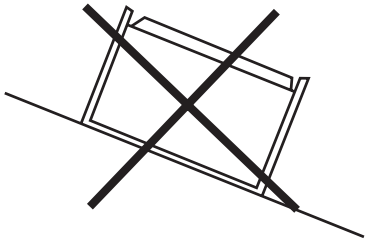

Maximum leaning of the machine (in case of dislevel)

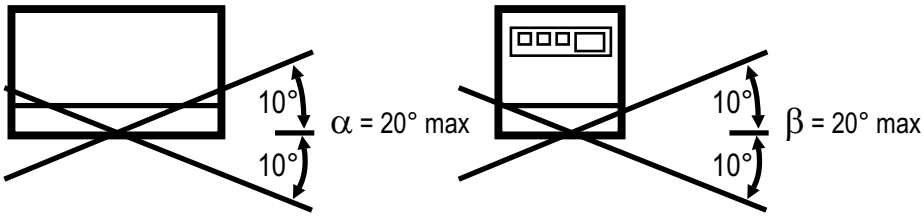


Check that the air gets changed completely and the hot air sent out does not come back inside the set so as to cause a dangerous increase of the temperature.

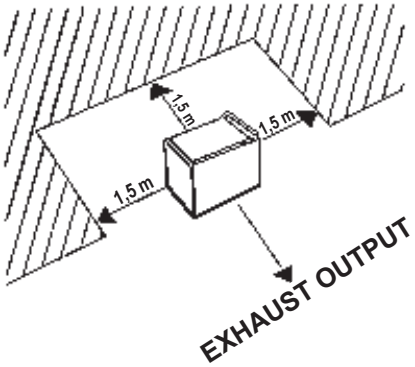


☞ Make sure that the machine does not move during the work: **block** it possibly with tools and/or devices made to this purpose.

## MOVES OF THE MACHINE

☞ At any move check that the engine is **off**, that there are no connections with cables which impede the moves.

## PLACE OF THE MACHINE

**⚠ ATTENTION**

For a safer use from the operator **DO NOT** fit the machine in locations with high risk of flood.
Please do not use the machine in weather conditions which are beyond IP protection shown both in the data plate and on page named "technical data" in this same manual.

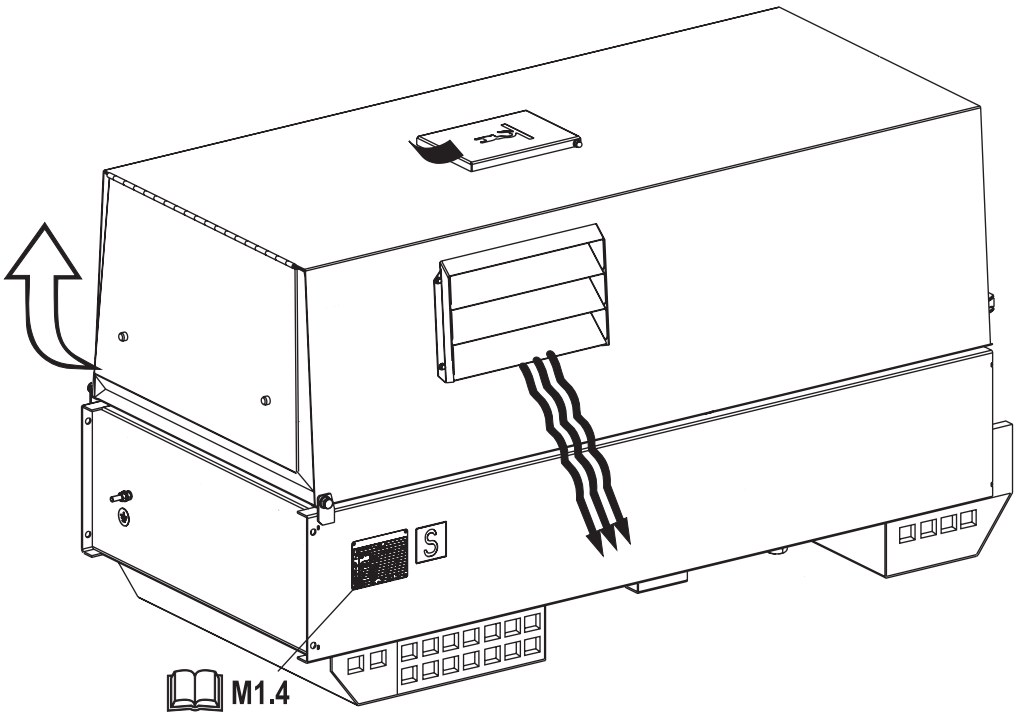
M1.4

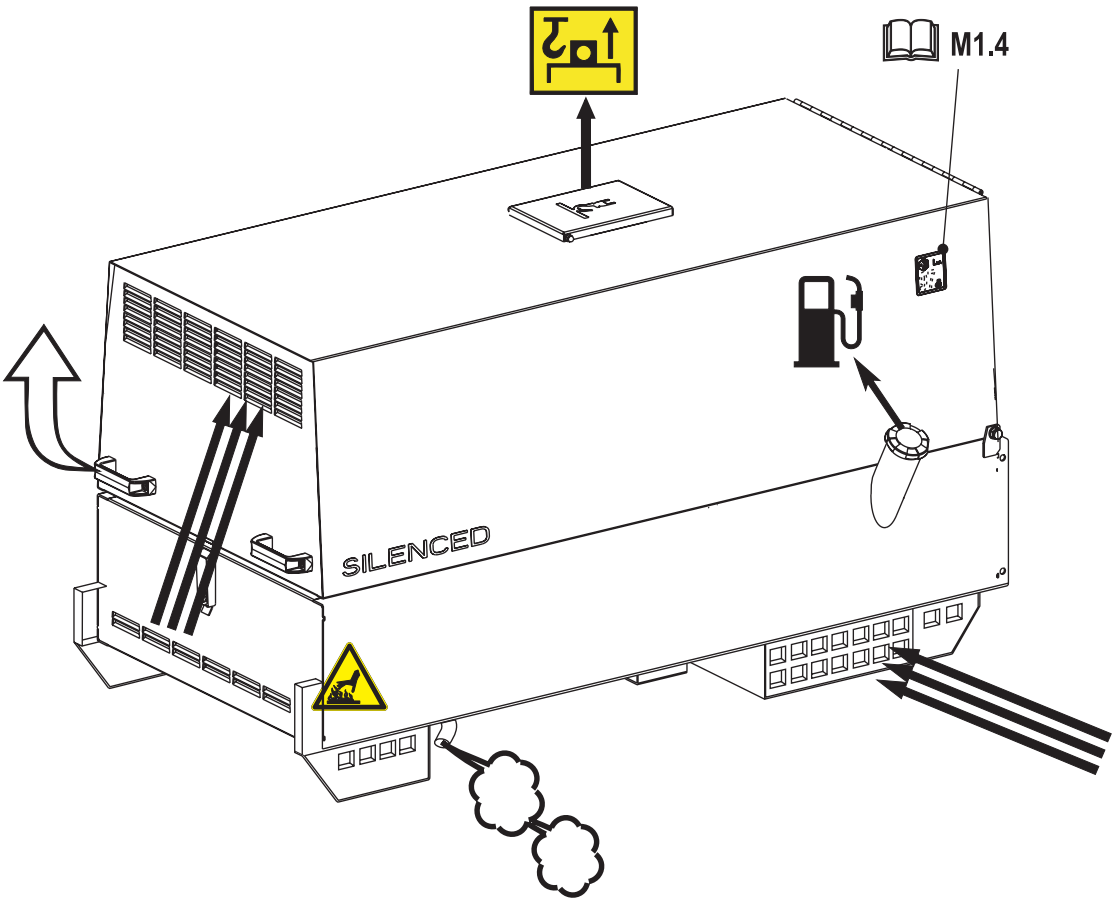
M1.4
SILENCED

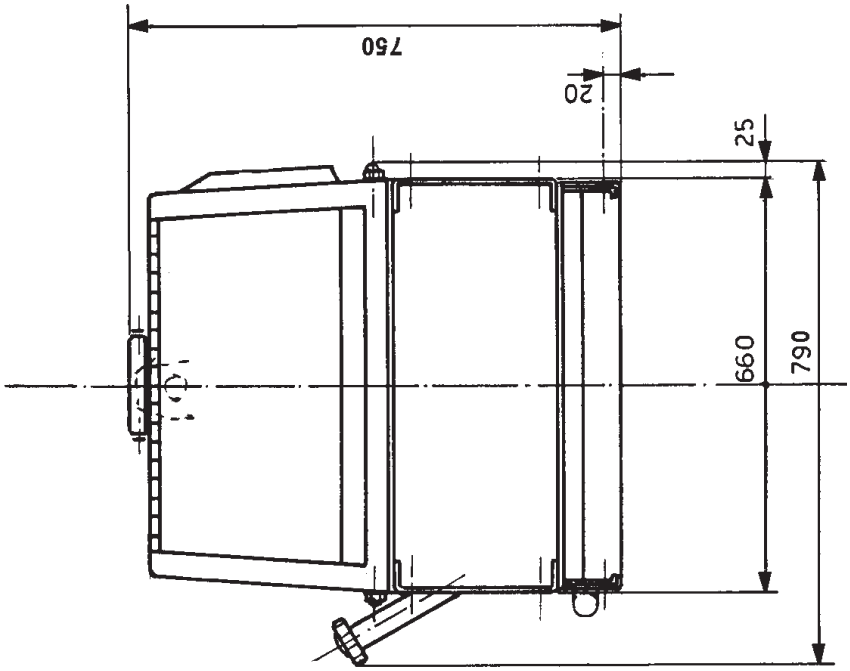


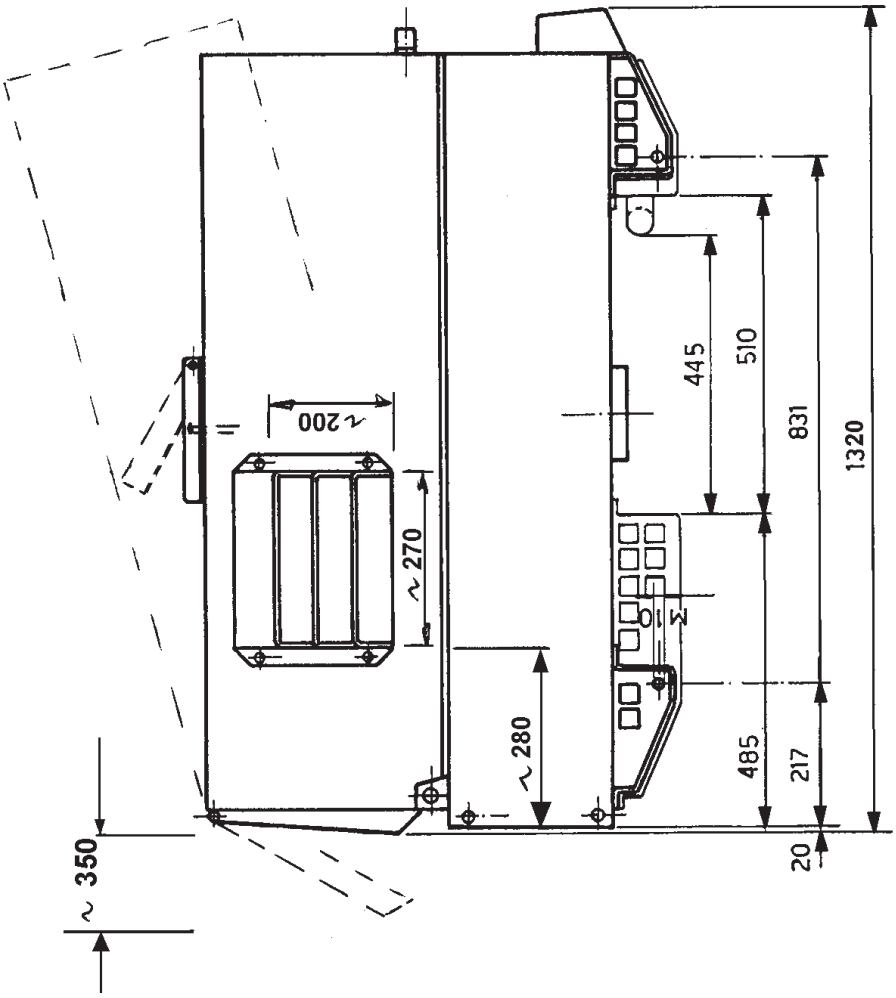


14/04/14 37304-I

# NOTE

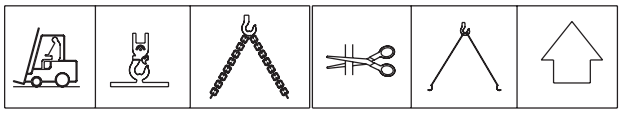

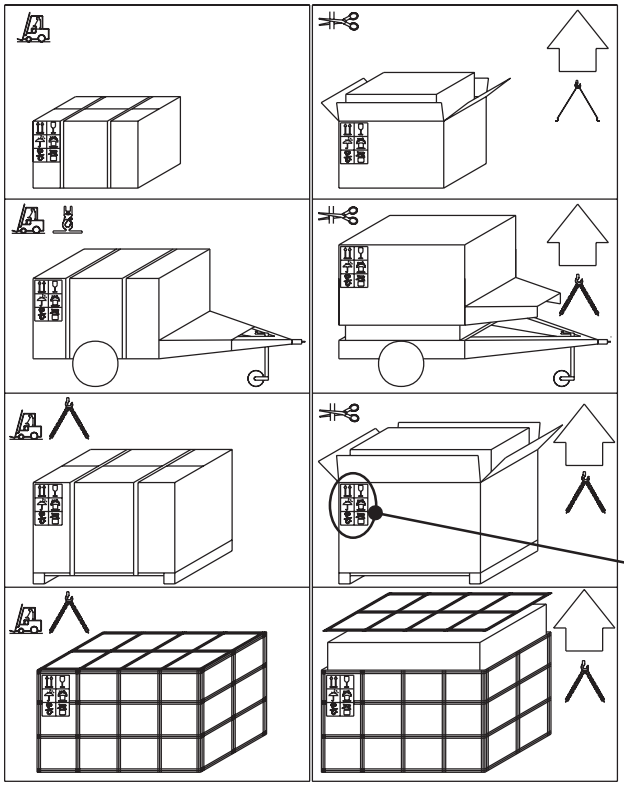

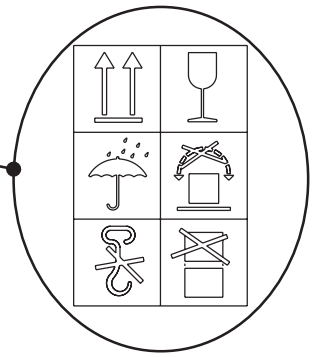

☞ Be sure that the lifting devices are: correctly mounted, adequate for the weight of the machine with it's packaging, and conforms to local rules and regulations.
When receiving the goods make sure that the product has not suffered damage during the transport, that there has not been rough handling or taking away of parts contained inside the packing or in the set.
In case you find damages, rough handling or absence of parts (envelopes, manuals, etc.), we advise you to inform immediately our Technical Service.

For eliminating the packing materials, the User must keep to the norms in force in his country.

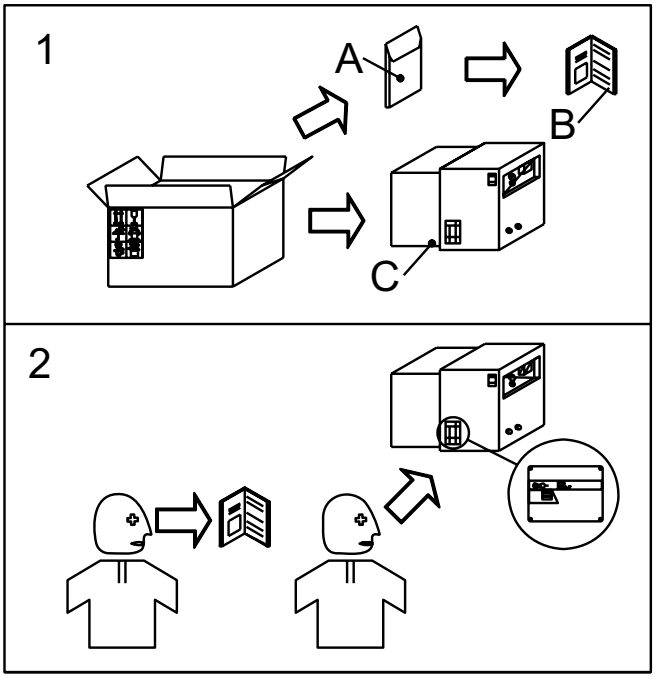


1) Take the machine (C) out of the shipment packing. Take out of the envelope (A) the user's manual (B).
2) Read: the user's manual (B), the plates fixed on the machine, the data plate.

## NOTE

Transportation must always take place with the engine off, electrical cables and starting battery disconnected and fuel tank empty.
Be sure that the lifting devices are: correctly mounted, adequate for the weight of the machine with it's packaging, and conform to local rules and regulations.
Only authorized persons involved in the transport of the machine should be in the area of movement.

**DO NOT LOAD OTHER PARTS WHICH CAN MODIFY WEIGHT AND BARICENTER POSITION.**
**IT IS STRICTLY FORBIDDEN TO DRAG THE MACHINE MANUALLY OR TOW IT BY ANY VEHICLE (model with no CTL accessory).**
If you did not keep to the instructions, you could damage the structure of the machine.

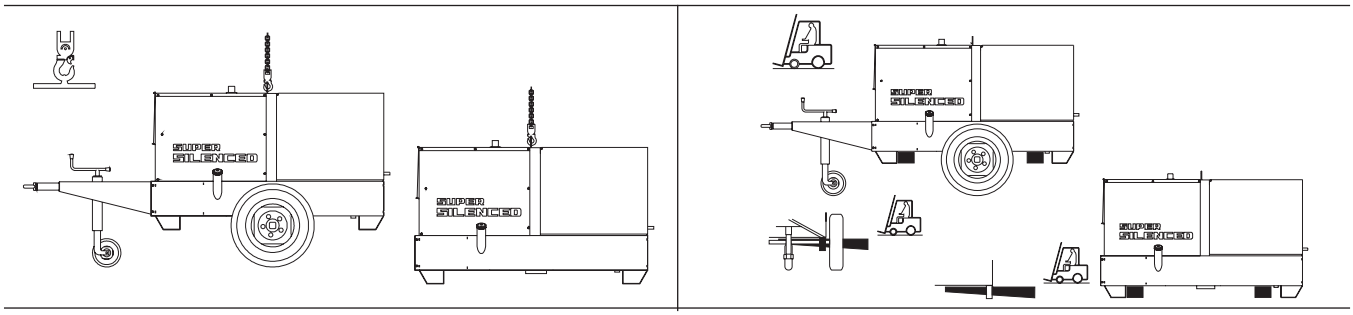

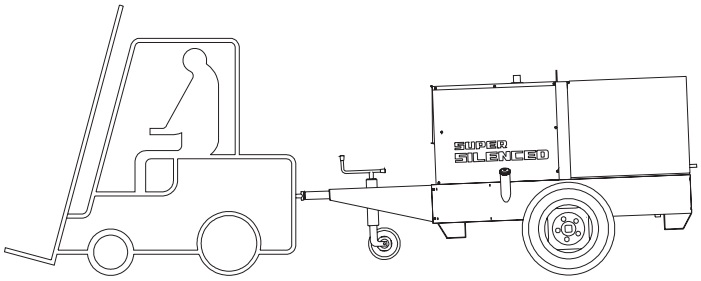

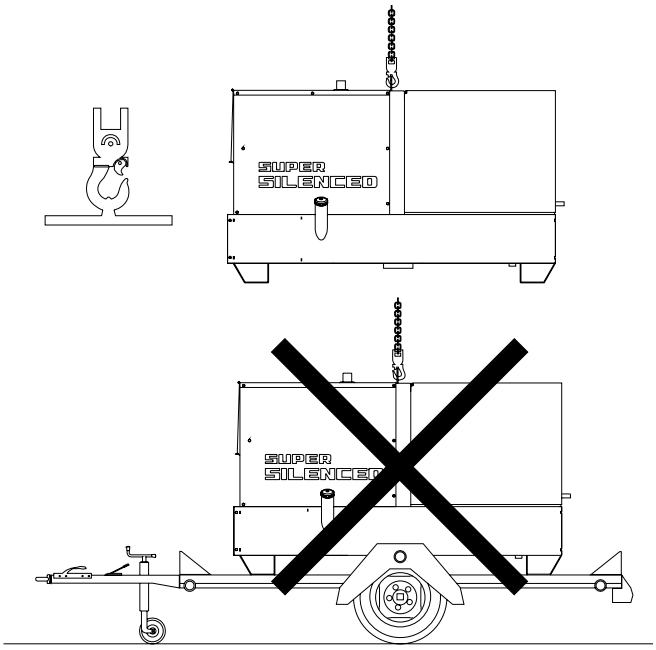

LIFT ONLY THE MACHINE

DO NOT LIFT THE MACHINE AND TRAILER

**DANGER:** LIFTING EYE IS NOT DESIGNED TO SUPPORT ADDED WEIGHT OF ROAD TOW TRAILER

## NOTE

Transportation must always take place with the engine off, electrical cables and starting battery disconnected and fuel tank empty.
Be sure that the lifting devices are: correctly mounted, adequate for the weight of the machine with it's packaging, and conform to local rules and regulations.
Only authorized persons involved in the transport of the machine should be in the area of movement.

**DO NOT LOAD OTHER PARTS WHICH CAN MODIFY WEIGHT AND BARICENTER POSITION.**
**IT IS STRICTLY FORBIDDEN TO DRAG THE MACHINE MANUALLY OR TOW IT BY ANY VEHICLE (model with no CTM accessory).**
If you did not keep to the instructions, you could damage the structure of the machine.

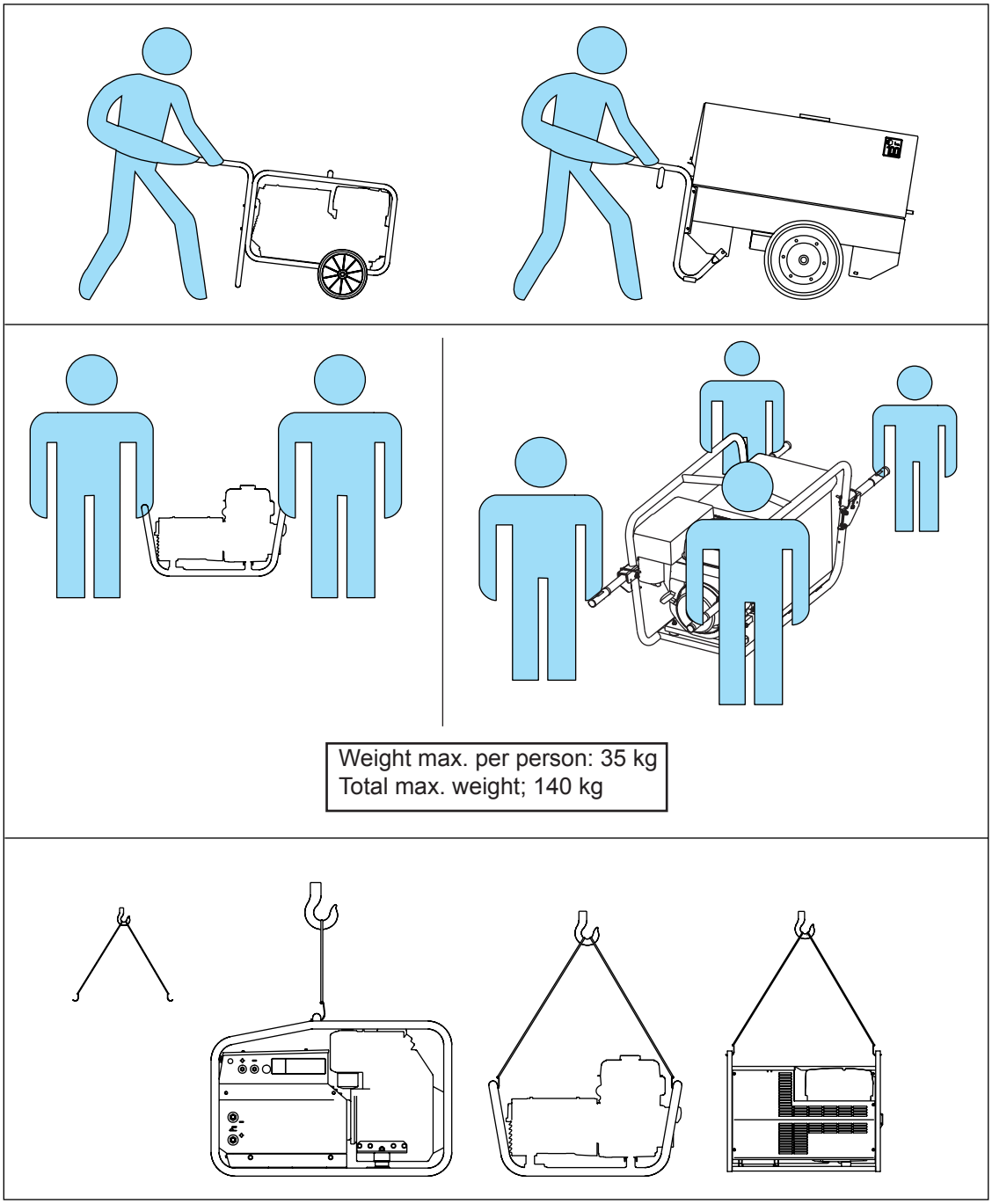

## ⚠ ATTENTION

The CTL accessory cannot be removed from the machine and used separately (actioned manually or following vehicles) for the transport of loads or anyway for used different from the machine movements.

**TRAILERS**

The machines provided for assembling the accessory (slow towing trolley) can be towed up to a **maximum** speed of **40 Kms/hour** on asphalted surfaces.

Towing on public roads or turnpikes of any type **IS EXCLUDED**, because **not** in possesion of the requirements by national and foreign traffic norms.

***Nota***: Lift the machine and assemble the parts as shown in the drawing

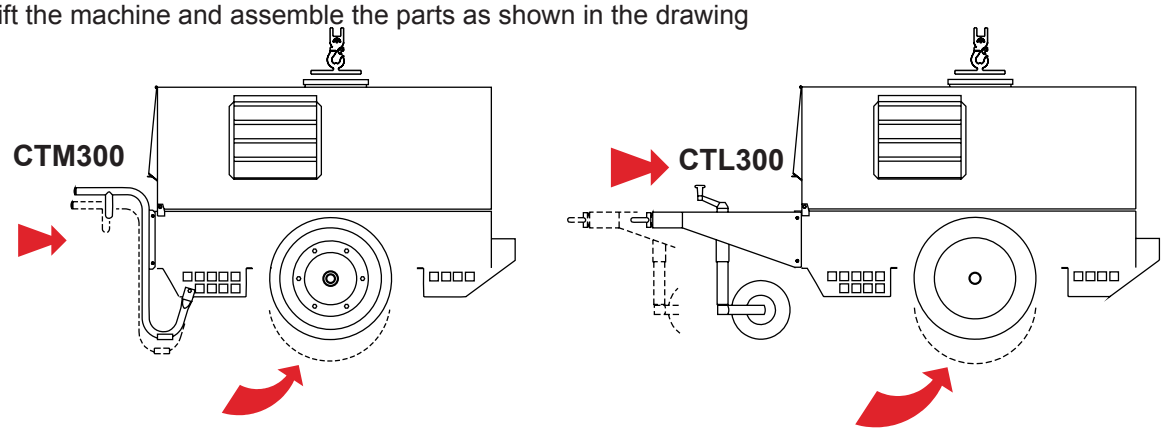


For assembling the generating set on the trolley CTL300 please keep to following instructions:

1) - Lift the generating set (by means of suitable hook).
2) - Slightly fix the jaw (3) of the parking foot to the barwith the M10x20 screws, the M10 nuts and the washers (so as to let the foot sprag go through).
3) - Split (unscrewing them) the two parts of the foot (4S-4I) to be able later to assemble them on the jaw.
4) - Introduce into the jaw (3) the upper part (4S) of the foot and screw again the lower part (4I), then tighten the screws (4V) of the jaw to the towbar and block momentaneously with the lever (4L) the whole foot.
5) - Assemble on the machine the towbar (5) complete of foot with the M10x20 screws, nuts and washers.
6) - Assemble the axle (7) to the base of the machine with the M8x20 screws and relative washers (two per part) so that their supports coincide.
7) - Introduce on the axle the antidust ring (7A) with folded edges turned toward the machine.
8) - Insert the wheel (9) on the axle paying attention tothe spacer (8D) which is between the two bearings, then insert the self blocking nut (8A) and finally assemble the shutting cap (8C).
9) - Pump the tyre (9) bringing the pressure to three atms.
10) - Lower the machine to the ground and place the parking foot definitively (regulating at the best height).

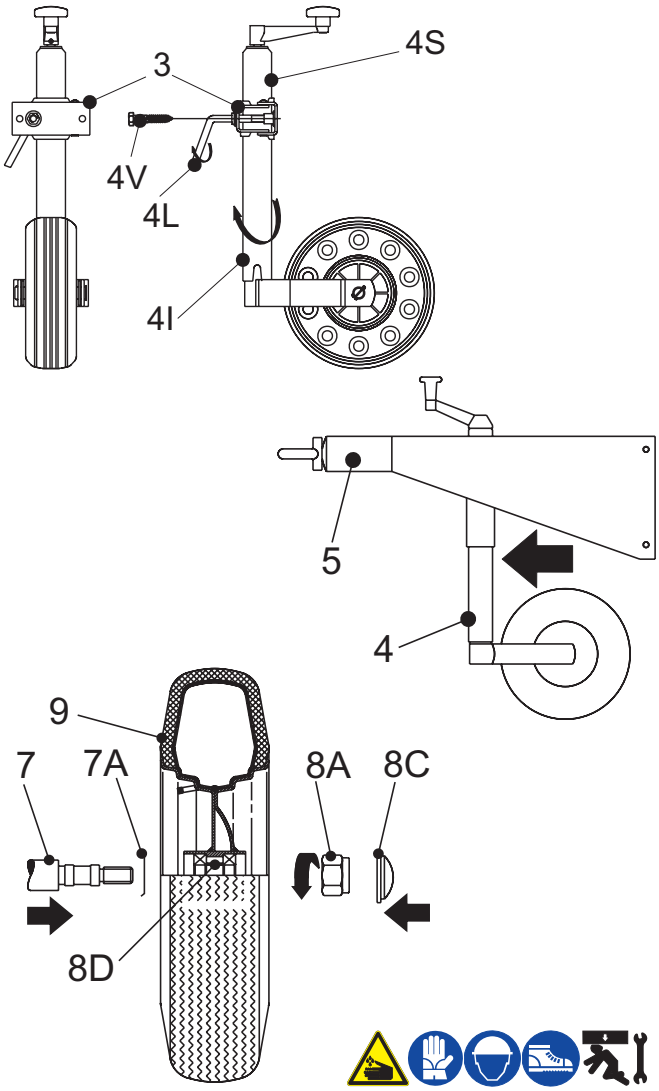


⚠ **ATTENTION**

Do not substitute the original tires with other types.

## BATTERY WITHOUT MAINTENANCE

Connect the cable + (positive) to the pole + (positive) of the battery (after having taken away the protection), by properly tightening the clamp.

Check the state of the battery from the colour of the warning light which is in the upper part.

- Green colour: battery OK
- Black colour: battery to be recharged
- White colour: battery to be replaced

**DO NOT OPEN THE BATTERY.**

## LUBRICANT

**RECOMMENDED OIL**

MOSA recommends selecting **AGIP** engine oil. Refer to the label on the motor for the recommended products.

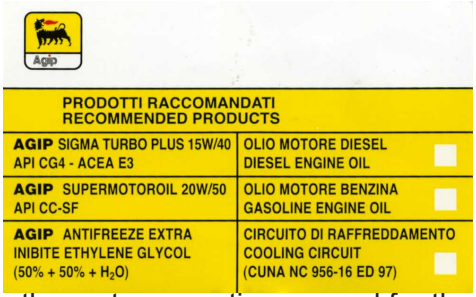

| PRODOTTI RACCOMANDATI<br>RECOMMENDED PRODUCTS | |
|---|---|
| **AGIP** SIGMA TURBO PLUS 15W/40<br>API CG4 - ACEA E3 | OLIO MOTORE DIESEL<br>DIESEL ENGINE OIL |
| **AGIP** SUPERMOTOROIL 20W/50<br>API CC-SF | OLIO MOTORE BENZINA<br>GASOLINE ENGINE OIL |
| **AGIP** ANTIFREEZE EXTRA<br>INIBITE ETHYLENE GLYCOL<br>(50% + 50% + $H_2O$) | CIRCUITO DI RAFFREDDAMENTO<br>COOLING CIRCUIT<br>(CUNA NC 956-16 ED 97) |

Please refer to the motor operating manual for the recommended viscosity.

**REFUELLING AND CONTROL:**

Carry out refuelling and controls with motor at level position.

1. Remove the oil-fill tap (24)
2. Pour oil and replace the tap
3. Check the oil level using the dipstick (23); the oil level must be comprised between the minimum and maximum indicators.

**ATTENTION**

It is dangerous to fill the motor with too much oil, as its combustion can provoke a sudden increase in rotation speed.

## DRY AIR FILTER

Check that the dry air filter is correctly installed and that there are no leaks around the filter which could lead to infiltrations of non-filtered air to the inside of the motor.

## OIL BATH AIR FILTER

Fill the air filter using the same engine oil up to the level indicated on the filter.

## FUEL

**ATTENTION**

Do not smoke or use open flames during refuelling operations, in order to avoid explosions or fire hazards.
Fuel fumes are highly toxic; carry out operations outdoors only, or in a well-ventilated environment.
Avoid accidentally spilling fuel. Clean any eventual leaks before starting up motor.

Refill the tank with good quality diesel fuel, such as automobile type diesel fuel, for example.

For further details on the type of diesel fuel to use, see the motor operating manual supplied.

Do not fill the tank completely; leave a space of approx. 10 mm between the fuel level and the wall of the tank to allow for expansion.

In rigid environmental temperature conditions, use special winterized diesel fuels or specific additives in order to avoid the formation of paraffin.

## GROUNDING CONNECTION

The grounding connection to an earthed installation **is obligatory** for all models equipped with a differential switch (circuit breaker). In these groups the generator star point is generally connected to the machine's earthing; by employing the TN or TT distribution system, the differential switch guarantees protection against indirect contacts.
In the case of powering complex installations requiring or employing additional electrical protection devices, the coordination between the protection devices must be verified.
For the grounding connection, use the terminal (12); comply to local and/or current regulations in force for electrical installations and safety.

Check daily

**NOTE**

*Do not alter the primary conditions of regulation and do not touch the sealed parts.*

## ENGINES WITH MANUAL RECOIL

Hold the starting handle firmly.

Pull the rope hard and fast. Pull it all the way out. Use two hands if necessary.

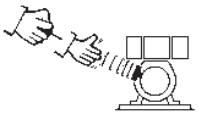

Then returning it slowly.

## ENGINES WITH ACCELERATOR LEVER

Make sure that the accelerator lever or the switch (16) is at its minimum setting.

Insert the electric protection device (D-Z2-N2) lever towards above and, where mounted, check the isolation monitor (A3) see page M37 –

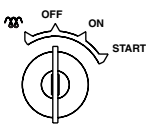


Introduce the key (Q1), turn it clockwise completely, leaving it as soon as the engine starts and/or the push button (32) (models without key) leaving it as soon as the engine starts.

☞ **NB.: <u>for safety reason the key must be kept by qualified personel.</u>**

Once the engine has started leave it running at a reduced speed for some minutes.

Accelerate the engine at max., set lever on maximum position and then take up load.

## ENGINES WITHOUT ACCELERATOR LEVER

Insert the electric protection device (D-Z2-N2) lever towards above and, where mounted, check the isolation monitor (A3) see page M37 –

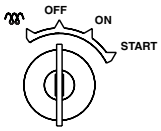


Introduce the key (Q1), turn it clockwise completely, leaving it as soon as the engine starts.

**NB.: <u>for safety reason the key must be kept by qualified personel.</u>**

Let the engine run for some minutes before drawing the load.

Open the fuel cock (where it is assembled).

**CAUTION**

*RUNNING-IN*
*During the first 50 hours of operation, do not use more than 60% of the maximum output power of the unit and check the oil level frequently, in any case please stick to the rules given in the engine use manual.*

**NOTE**

*The machines with E.P.1 engine protection device (D1), use the accelerator lever ONLY IN EMERGENCY when the engine protection does not work. In this case turn immediately to our Authorized Assistance Centers.*

## ENGINE WITH PREHEATING GLOW PLUGS

Turn the starter key (Q1) on the position "preheating glow plugs" (the glow plugs light will be on I4), when the light is off, turn the starter key completely clockwise until the engine begins to fire.
Let the engine run for some minutes before drawing the lood.

**ENGINES WITH R.P.M. ELECTRONIC ADJUSTER (ONLY FOR GENERATING SET)**

Turn the starter key (Q1) completely clockwise until the engine begins to fire.

☞ Wait for the AUTOMATIC preheating time before drawing the load

**OCCASIONAL USE OF THE ENGINE**
Using the engine in special conditions which need an immediate intervention, such as emergency plants, etc., use advise to use our Engine Assistance Centres for specific interventions or our Technical Assistance Service.

**CAUTION**

If the engine fails to start, do not insist for at least 15 seconds.
*Space the further operations waiting for at least 4 minutes.*

**CAUTION**

**MACHINE WITH EMERGENCY BUTTON**
Before starting the engine, make sure that the emergency button (32B) is off (turn the button clockwise for this operation)

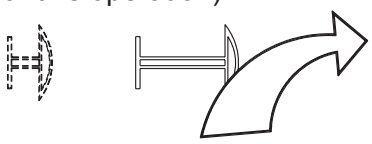

**CAUTION**

*RUNNING-IN*
*During the first 50 hours of operation, do not use more than 60% of the maximum output power of the unit and check the oil level frequently, please follow the instructions on the engine use and maintenance manual..*

☞ Before stopping the engine **it is compulsory** to effect the following operations:

- stop to draw three/single-phase current from the auxiliary sockets.

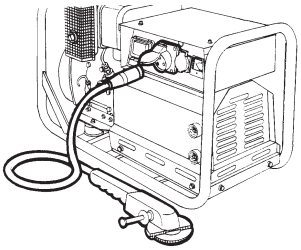

- stop to draw power from the welding sockets (only for TS models).

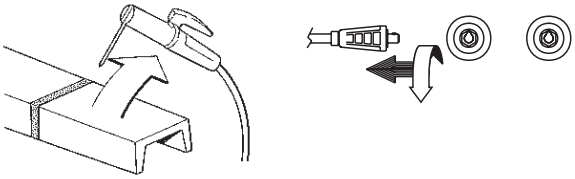

**ENGINES WITH ACCELERATOR LEVER**

☞Make sure that the unit Is not supplying any power.

Disconnect the electrical protection device (D-Z2-N2) lever downward.

Set the accelerator lever or the switch (16) to minimum position and wait for a few minutes to allow the engine to cool, anyway follow the instructions contained in the engine manual.

Pull the stop lever (28) until the engine stops (where it is assembled).

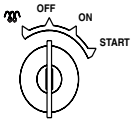


Remove the key (Q1) turning it counter clockwise, OFF position, then take it out.

☞**NB.:** **for safety reason the key must be kept by qualified personel.**

**ENGINES WITHOUT ACCELERATOR LEVER**

Make sure that the unit is not supplying any power.

Disconnect the electrical protection device (D-Z2-N2) lever downward.
Let the engine idle for a few minutes.

Press the pushbutton (F3) until the engine stops (where it is assembled).

Shut the fuel cock (where it is assembled).

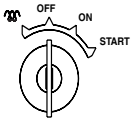


Remove the key (Q1) turning it counter clockwise, OFF position, then take it out.

☞**NB.:** **for safety reason the key must be kept by qualified personel.**

**ENGINES WITH R.P.M. ELECTRONIC ADJUSTER (ONLY FOR GENERATING SET)**

Make sure that the unit is not supplying any power.
.
Disconnect the electrical protection device (D-Z2-N2 lever downward.

Let the engine idle for a few minutes.

Press the pushbutton (F3) until the engine stops (where it is assembled).

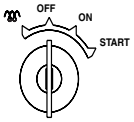


Remove the key (Q1) turning it counter clockwise, OFF position, then take it out.

☞**NB.:** **for safety reason the key must be kept by qualified personel.**

**CAUTION**

**MACHINE WITH EMERGENCY BUTTON**
Pressing it, it allows to stop the engine in any condition (32B) (when assembled).
To re-establish it, see page M21...

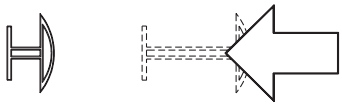

# CONTROLS LEGENDE



| | |
|---|---|
| 4A | Hydraulic oil level light |
| 9 | Welding socket ( + ) |
| 10 | Welding socket ( - ) |
| 12 | Earth terminal |
| 15 | A.C. socket |
| 16 | Accelerator lever |
| 17 | Feed pump |
| 19 | 48V D.C. socket |
| 22 | Engine air filter |
| 23 | Oil level dipstick |
| 24 | Engine oil reservoir cap |
| 24A | Hydraulic oil reservoir cap |
| 24B | Water filling cap |
| 25 | Fuel prefilter |
| 26 | Fuel tank cap |
| 27 | Muffler |
| 28 | Stop control |
| 29 | Engine protection cover |
| 30 | Engine cooling/alternator fan belt |
| 31 | Oil drain tap |
| 31A | Hydraulic oil drain tap |
| 31B | Water drain tap |
| 31C | Exhaust tap for tank fuel |
| 32 | Button |
| 33 | Start button |
| 34 | Booster socket 12V |
| 34A | Booster socket 24V |
| 35 | Battery charge fuse |
| 36 | Space for remote control |
| 37 | Remote control |
| 42 | Space for E.A.S. |
| 42A | Space for PAC |
| 47 | Fuel pump |
| 49 | Electric start socket |
| 54 | Reset button PTO HI |
| 55 | Quick coupling m. PTO HI |
| 55A | Quick coupling f. PTO HI |
| 56 | Hydraulic oil filter |
| 59 | Battery charger thermal switch |
| 59A | Engine thermal switch |
| 59B | Aux current thermal switch |
| 59C | Supply thermal switch wire feeder-42V |
| 59D | Pre-heater (spark plug) thermal switch |
| 59E | Supply thermal switch oil/water heather |
| 59F | Electropump thermal switch |
| 63 | No load voltage control |
| 66 | Choke control |
| 67A | Auxiliary / welding current control |
| 68 | Cellulosic electrodes control |
| 69A | Voltmeter relay |
| 70 | Warning lights |
| 71 | Selecting knob |
| 72 | Load commut. push button |
| 73 | Starting push button |
| 74 | Operating mode selector |
| 75 | Power on warning light |
| 76 | Display |
| 79 | Wire connection unit |
| 86 | Selector |
| 86A | Setting confirmation |
| 87 | Fuel valve |
| 88 | Oil syringe |
| A3 | Insulation monitoring |
| A4 | Button indicating light 30 l/1' PTO HI |
| B2 | Engine control unit EP2 |
| B3 | E.A.S. connector |
| B4 | Exclusion indicating light PTO HI |
| B5 | Auxiliary current push button |
| C2 | Fuel level light |
| C3 | E.A.S. PCB |
| C6 | Control unit for generating sets QEA |
| D | Ground fault interrupter ( 30 mA ) |
| D1 | Engine control unit and economiser EP1 |
| D2 | Ammeter |
| E2 | Frequency meter |
| E6 | Frequency rpm regulator |
| E7 | Voltmeter regulator |
| F | Fuse |
| F3 | Stop switch |
| F5 | Warning light, high temperature |
| F6 | Arc-Force selector |
| G1 | Fuel level transmitter |
| H2 | Voltage commutator |
| H6 | Fuel electro pump |
| H8 | Engine control unit EP7 |
| I2 | 48V A.C. socket |
| I3 | Welding scale switch |
| I4 | Preheating indicator |
| I5 | Y/▲ switch |
| I6 | Start Local/Remote selector |
| I8 | AUTOIDLE switch |
| L | A.C. output indicator |
| L5 | Emergency button |
| L6 | Choke button |
| M | Hour counter |
| M1 | Warning level light |
| M2 | Contactor |
| M5 | Engine control unit EP5 |
| M6 | CC/CV switch |
| N | Voltmeter |
| N1 | Battery charge warning light |
| N2 | Thermal-magnetic circuit breaker/ Ground fault interrupter |
| N5 | Pre-heat push-button |
| N6 | Connector - wire feader |
| O1 | Oil pressure warning light/Oil alert |
| O8 | V/A digital instruments and led VRD PCB |
| P | Welding arc regulator |
| P8 | Water in fuel |
| Q1 | Starter key |
| Q3 | Derivation box |
| Q4 | Battery charge sockets |
| Q7 | Welding selector mode |
| R3 | Siren |
| S | Welding ammeter |
| S1 | Battery |
| S3 | Engine control unit EP4 |
| S6 | Wire feeder supply switch |
| S7 | Plug 230V singlephase |
| T | Welding current regulator |
| T4 | Dirty air filter warning light/indicator |
| T5 | Earth leakage relay |
| T7 | Analogic instrument V/Hz |
| U | Current trasformer |
| U3 | R.P.M. adjuster |
| U4 | Polarity inverter remote control |
| U5 | Relase coil |
| U7 | Engine control unit EP6 |
| V | Welding voltage voltmeter |
| V4 | Polarity inverter control |
| V5 | Oil pressure indicator |
| W1 | Remote control switch |
| W3 | Selection push button 30 l/1' PTO HI |
| W5 | Battery voltmeter |
| X1 | Remote control socket |
| Y3 | Button indicating light 20 l/1' PTO HI |
| Y5 | Commutator/switch, serial/parallel |
| Z2 | Thermal-magnetic circuit breaker |
| Z3 | Selection push button 20 l/1' PTO HI |
| Z5 | Water temperature indicator |

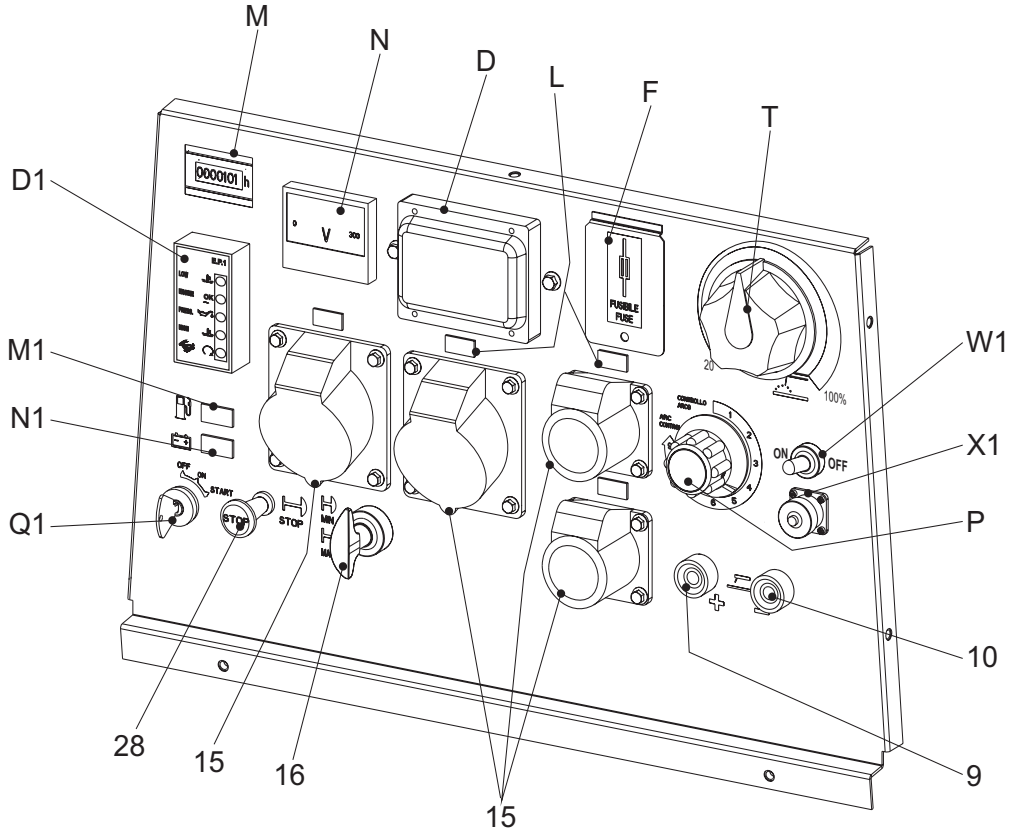


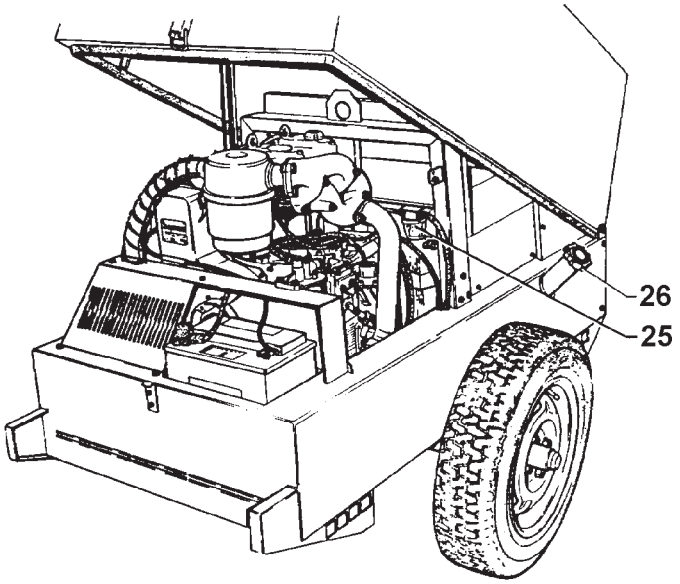


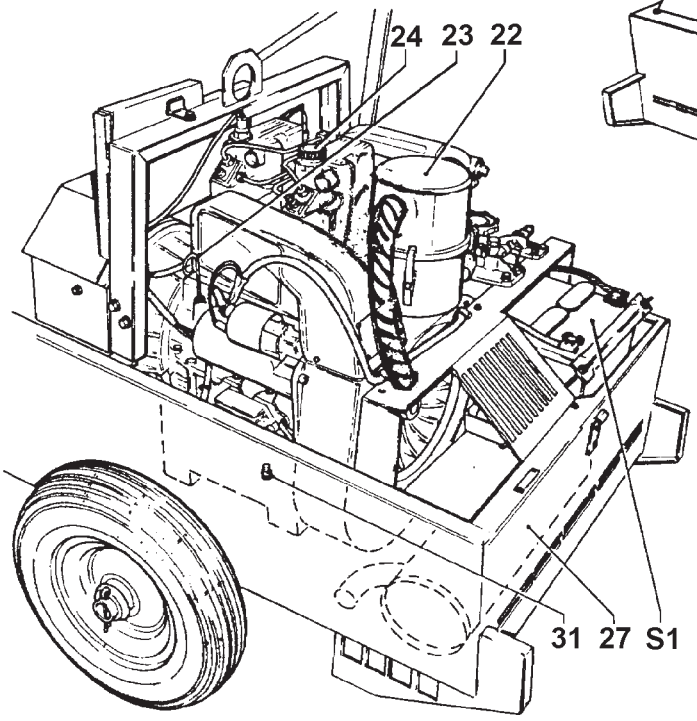


14/04/14 37304-I

This symbol (Norm EN 60974-1 security standards for arc welders ) signifies that the welder can be used in areas with increased risk of electrical shock.

**ATTENTION**

The sockets, after the machine is started (see pages M21-26), also with no cables, are anyway under voltage.

**ATTENTION**

The areas, access of which is forbiden to unqualified personel, are:
- the control switchboard (front) - the exhaust of the endothermic engine - the welding process.

Check at the beginning of any work the electric parameters and/or the control placed on the front.

Make sure that the ground connection (12) is efficent (keep to installation local rules and/or to national laws), in order to integrate or ensure the working of varius electric protection devices referring to the several distribution system TT/TN/IT, operation unnecessary for machine with isometer.

Fully insert the welding cable plugs into the corresponding sockets (“only gauging”, 9+/10-) turnning them clockwise to lock them in position.

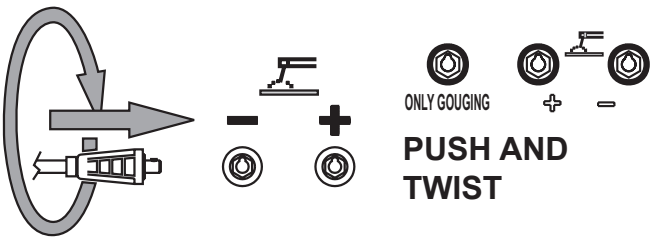


**TECTION (D1)**
See page M 39.1

**REMOTE CONTROL TC…**
See page M 38

**WELDING CURRENT REGULATOR**
Position welding current adjusting knob (T) in correspondance of the chasen current value, so as to obtain the necessary amperage, taking into acount the diameter and the type of the electrode.
For technical data see page M1.6

☞Make sure that the ground clamp ,whose cable must be connected to the + or - terminal, depending on the type of electrode, makes a good connection and is near to the welding position.

Pay attention to the two polarities of the welding circuit, which must not come in electric contact between themselves.

When using the welder for air arc gouging connect the ground lead to the - socket and the gouging lead to the socket marked "only gouging" (if present).

**MACHINES WITH E.V. PROTECTION**

Accelerate the engine at max. with the accelerator lever (16).See page M 39.

**MACHINE WITH E.P.2 PROTECTION (B2)**

Accelerate the engine at max. with the accelerator lever (16) (when assebled).
See page M 39

**MACHINE WITH E.P.1 PRO-**

**ATTENTION**

To reduce the risk of electromagnetic interferences, use the minimum lenght of welding cables and keep them near and down (ex. on the floor). The welding operations must take place far from any sensitive electronic device.Make sure that the unit is earthed. (see M20 and/or M25). In case the interference should last, adapt further disposition,such as: move the unit, use screened cables, line filters, screen the entire work area.
In case the above mentioned operations are non sufficient, please contact our Thechnical Assistance Service.

**CAUTION**

With a welding cable length up to 20 m is suggested a section of 35 mm²; with longer cables a bigger section is required.

## MACHINE WITH REDUCTION SCALE SWITCH

For small electrodes (up to Ø 3.25-130A and 4-200A) it is recommended to use the reduction scale switch (I3) allowing a more accurate regulation of the welding current (lever position at 130 A and/or 200A).

When using electrodes of a diameter greater than 3.25 and/or 4 set the welding scale knob to 100% and/or max. position.
The arc regulator (T) functions equally between both positions (100%-130A and/or 200A).

Protection fuse (when assembled):the fuse protects the electronic welding PCB in case the remote control is short circuited.

## MACHINE WITH O.C.V.

It permits to choose, according to the work to be done and/or the electrode type used, the best O.C.V.

## MACHINE WITH POLARITY INVERTER

It permits to have at the electrode holder the positive or negative polarity of the welding diode bridge.
It is used above all in the first run with cellulosic electrodes to lower the bath temperature and so doing ease up the welding on pipes of small thickness

## MACHINE WITH BASIC CURRENT "BC"

Positioning the switch on „ON“, is obtained a low voltage welding current which keeps, always, the lit arc necessary for some types of cellulosic electrodes or when a high penetration is wanted.

For electrodes of basic or rutile type, position the switch on "OFF", the welding current will always remain constant.

## "CC/CV" MODELS

These models can be used with electrodes or for TIG welding by selecting the CC (constant current) mode, and with solid wire (MIG, MAG) or flux cored wire selecting the CV (constant voltage) mode. The mode of operation is selected by a switch on the front panel.

## MACHINE WITH ARC CONTROL OR SELECTOR "ARC FORCE"

Set the welding arc using adjuster knob (P) so as to abtain, for the chosen current value, the best arc characteristic according to the electrode type and to the work to be performed.

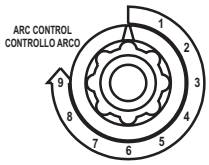

On machines with an Arc Force selector, the same result can be obtained by turning the selector "ON" or "OFF". When switched "ON" a base current is applied to the welding current output acting as a sort of "automatic" arc forcing that does not need to be regulated.

For technical data see page M1.6

☞ At the end of every welding process and/or work, proceed with all the use operations **in inverted sense**.

To stop the machine see pages M 22-27.

☞ **It is strictly forbidden to connect the group to the public mains a/o to another source of electric power.**

**WARNING**

*Sockets are not **self-locked**: tension is avaible immediately after starting also with no plug.*

**WARNING**

The areas, **access** of which is forbidden to unqualified personel, are:
- the control switchboard (front), the exhaust of the endothermic engine.

☞ At the beginning of every work, check the electric parameters and/or the controls placed on the front.

Make sure the unit is properly grounded (12) (where it is assembled).
- See page M20, 21, 22, 25, 26, 27 -.

Move the accelerator lever (16) and reach the engine maximum speed, except for the engines with constant rpm; the voltmeter (N) (where it is assembled) shows the single-phase voltage whether three or single-phase current has to be drawn.

| Nominal voltage | Indicative no-load voltage | |
|---|---|---|
| | asynchronous | synchronous (*) |
| 110V | ±10% | ±5% |
| 230V | ±10% | ±5% |
| 230V | ±10% | ±5% |
| 400V | ±10% | ±5% |

*N.B.: with electronic tens. regul. RVT ±1%

Connect up the machine, using proper plugs and cables in good condition to the AC socket (15) to draw single or three-phase power, or, by cables with adeguate section, to the terminal board, placed inside the derivation box (Q3).

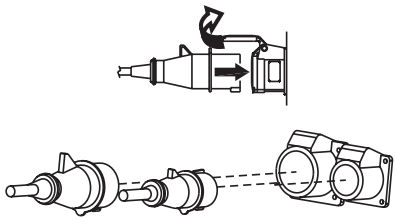

The warning light (L), located near the current socket, lights up when the unit can supply alternated current, on condition that the engine is at the maximum rpm.

☞ N.B.:if the warning light does not flash, check the accelerator which must bebat its maximum, or the fuse of the relevant socket. (single-phase) or the thermoprotection.

Using several sockets at tha same time, the maximum power possible is that indicated on the data plate.

To draw power simultaneously in the TS welder version see page M1.6

**CAUTION**

*The replacement of the fuse must absolutely be done with the engine off (remove the mechanical protection, then shift down the small lever of the fuse holder placed on the front panel).*

The max. continuous power of the generating set or theload current must not be exceeded.

**MACHINE WITH THERMOPROTECTION**

If you overload the genset the thermoprotection will automatically switch off.
If the thermoprotection is released, disconnect all the connected loads.

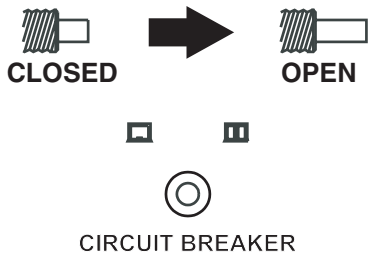


Reset the thermoprotection pressing the central pole.
When reset, connect the loads again.
In case the protection should act furtherly, check: the connections, the wires or others, and if necessary call the Assistance Service.

Avoid to hold the central pole of the thermoprotection pressed for a long time.
Otherwise, in case of trouble, it will not click, **damaging** the generating set.

## TS ... PL VERSION

Start the machine and wait for the end of the pre-heating time imposed by the EP1, EP2, EP5 engine protection device. - See pages M39... -
Press the „generation possibility“ push button (B5) placed on the font side of machine.
The voltmeter will show the auxiliary voltage which, for machines at 1500/1800 RPM, must. be approx. ≈230V ± 10% and for machines at 3000/3600 RPM (engine idling) must. be approx. ≈180V ± 10%.

Push upwards the lever of magnetothermic switch reffering to the socket from which load is to be drawn.

## MACHINE WITHOUT PROTECTIVE DEVICE

In case machine is not equipped wìth protective device of indirect contacts, by means of automatic breaking of supply, it **is necessary** to put between the load and the generatíon a differential swítch or a similar equipment capable, in any case, to observe the regulations in force CEI 64/8 (and/or successive) Part 4 Par. 4.13.1 and harmonzed by directive Nr. 72/23/EEC.

## UNIT FITTED WITH GROUND FAULT INTERRUPTER SWITCH (GFI)

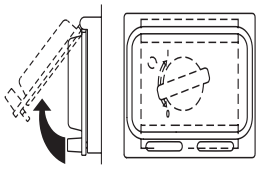

Turn on the GFI safety-switch (D) by pushing it upwards.

The GFI is a safety device which protects the circuit in the event of a malfunction. In this case the switch disconnects the three and single-phase circuit when in any part of the electric connections a current leakage of more than 30 mA occurs.

## UNIT FITTED WITH THERMAL MAGNETIC BREAKER

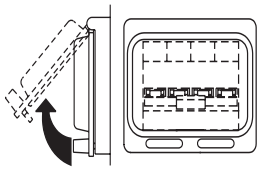

Turn on the thermal magnetic breaker (Z2) by pushing it to the ON position.

The thermal-magnetic breaker is a safety device which protects the circuìt in the event of a malfunction. In this case the switch disconnects the three and single-phase circuit when in any part of the electric connections a short circuit or a current absorption occurs above the data specified on the label of the unit.
In the model with setting **DO NOT INTERVENE** on the setting itself. To modify it, please contact our Technical Assistance Service.

## UNIT FITTED WITH GFI SWITCH THERMAL MAGNETIC BREAKER

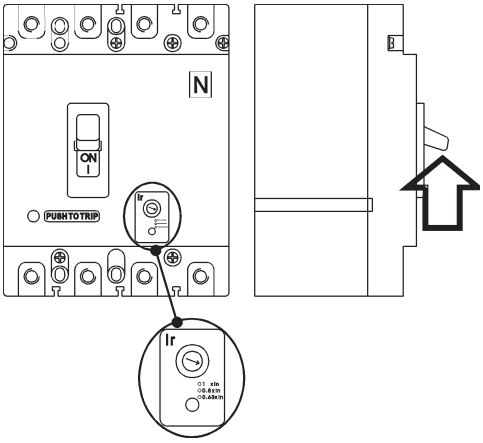


This switch includes the characteristics of both types of breakers (N2).

## UNIT WITH VOLTMETRIC COMMUTATOR (ONLY FOR GENERATING SET)

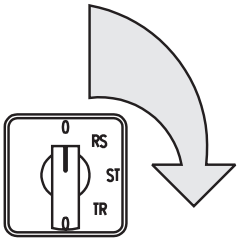


☞ **WARNING:** the possible single-phase loads must be correctly divided in the three phases, in order to avoid any possible voltage fall on one phase that results excessively loaded.

Check the voltages on the various phases with the switch located on the front (H2) and check, reading on the voltmeter (N) about the same voltage value
☞ N.B.:in case of overload, it is possible that the engine lowers its speed and the voltage is reduced remarkably. In this case, it is necessary to reduce immediately the load.

## ⚠ CAUTION

For machines at 3000/3600 RPM the EP1 safety device will automatically provide to accelerate engine when load is drawn.
- See page M39.1 -

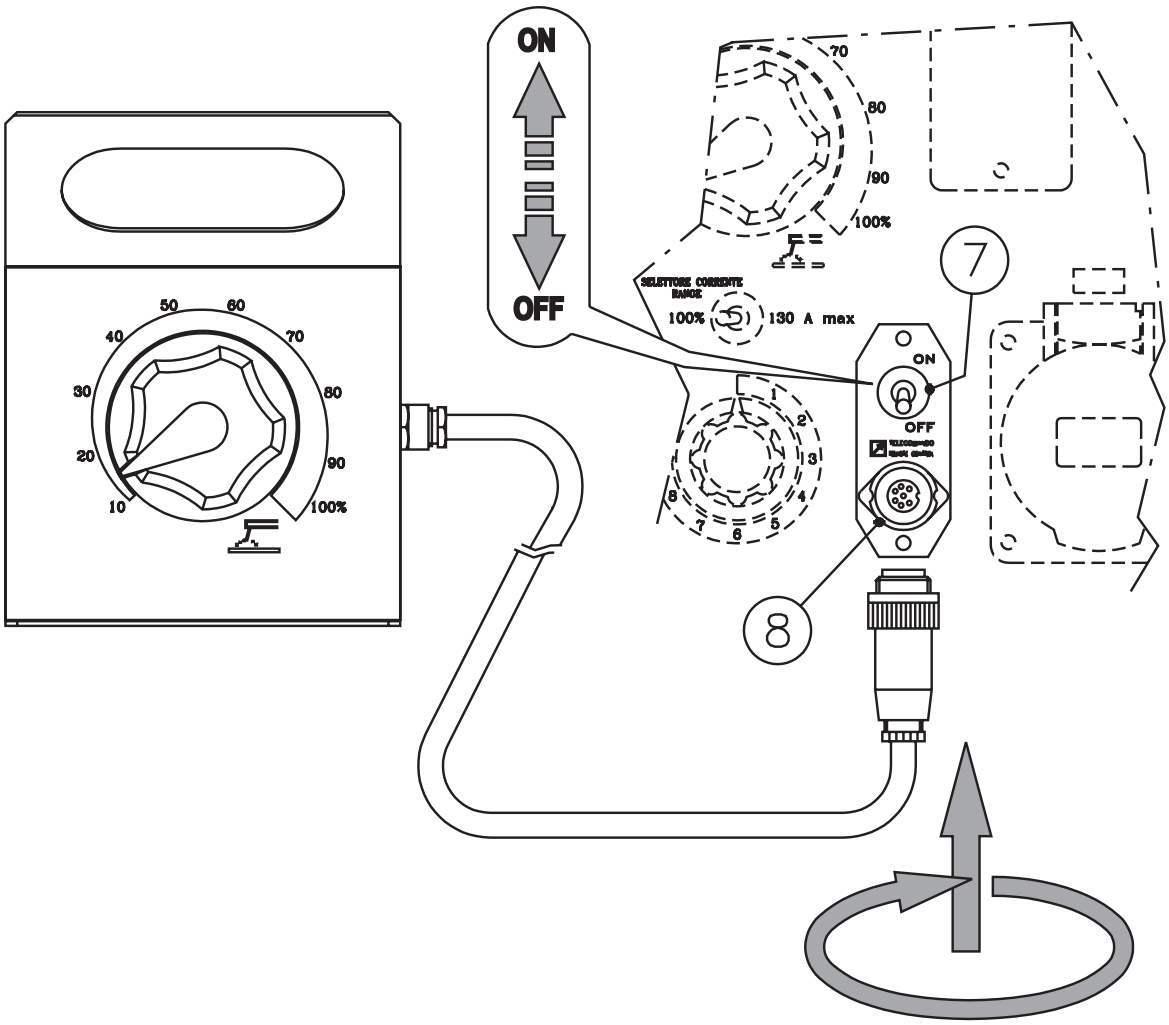


PUSH AND
SCREW TIGHT

The remote control device for regulating the welding current is connected to the front panel by means of a multipole connector.

To regulate the current from the TC2 / TC2/50, move the switch (7), located above the multipole connector (8), to "ON" position.

Position welding current adjusting (T) knob at the necessary current value for the diameter and type of electrode.

## ENGINE PROTECTION (EP1)

The electronic device EP.1 (D1) is a microprocessor with logic-circuit board that ensures the protection of the engine in case of low oil pressure or engine high temperature.

Located on the front of the machine, the EP.1 enters in operation when the engine has been turned on with the ignition key.

The yellow warning light for low oil temperature (D1.1) will immediately light up; **after** 15 seconds the emgine will be checked and if everything is operating normally, the "OK engine" light will switch on.

**CAUTION**

**IN THE FIRST FRACTION OF TIME THE DEVICE DOES NOT MAKE ANY PROTECTION.**

The automatic device requires an engine warning up time of at least 45 seconds, not permitting to draw power when the engine is still cold.

☞ **N.B**.: A longer warning up time (4-5 minutes) is advisable for temperatures below +10°C.

When the warning light (D1.1) goes off, whether the unit is used as welder or as a generator, the green light (D1.5) will light up, hte engine will go to maximum speed ,permitting to draw power.
Should the oil pressure be insufficent, the red light (D1.3) will light up and the EP.1 device will stop the engine.
If the temperature rises to dangerous levels, the red light (D1.4) will light up and the engine will stop thus preventing to draw power.

### LIQUID COOLED ENGINE

In case of cooling liquid high temperature, the warning light (D1.4) will light up and the engine will stop thus preventing to draw power.
In this case it is SUGGESTED to stop the engine and control the cooling level.

In case of low pressure, check the level and if it is correct, call the service station. In case of high temperature, make sure that there are no leaves and/or pieces of material obstructing tha air circuit.

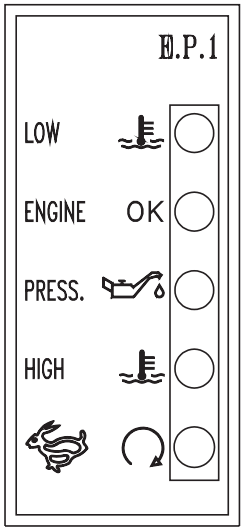


D1.1(G) Low oil temperature/ Cold engine

D1.2(V) Engine test/ OK engine

D1.3(R) Low oil pressure

D1.4(R) High temperature

D1.5(V) Engine at maximum

**COLORS**
G = yellow
V = green
R = red

## ENGINE EQUIPPED WITH A MANUAL ACCELERATOR

☞ **NOTE:** This unit is equipped with a manual accelerator for use in the unlikely event that the EP.1 or the accelerator solenoid should fail.This manual accelerator can also be used in cases where the auto-idle function is not suitable for the type of welding being carried out.

**CAUTION:** for machines with EP.1 engine protection: use the accelerator lever **ONLY IN EMERGENCY** when the automatic idle does not work.

Accelerator lever

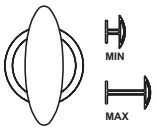


☞ **N.B**.: if the unit is used as a generator in hot climates and with loads near to the maximum, the protection can be triggered off, please reduce the load of the engine.

Once the cause of the problem has been removed, to ensure the protection it is sufficent to set the key to zero and restart the engine.

**NOTE**

THE ENGINE PROTECTIONS OF THE “EP” TYPE DO NOT WORK WHEN THE OIL IS OF LOW QUALITY BECASE NOT CHENGED REGULARY AT INTERVALS AS PRESCRIBED IN THE OWNER’S ENGINE MANUAL.

## ENGINE PROTECTION (ES - EV)

The devices ES or EV ensure the protection of the engine in case of low oil pressure or engine high temperature.

The system consist of electronic card of control and check, and of an engine stop device: solenoid (**E**lettro**S**top), electrovalve (**E**lettro**V**alvola)

The device enter in operation when the engine starts and, in case of low oil pressure and high temperature, will stop the machine and show the cause of the stop with the warning light of high temperature or low oil pressure.

In case of low oil pressure, check the level and if it is correct, call the Service Station. In case of high temperature, make sure that there are no leaves and/or pieces of material obstructing the air ducts.

☞ **N.B.:** if the unit is used as a generator in hot climates and with loads near to the maximum, the protection device can be triggered off, please reduce the load of the engine.

Once the cause of the problem is removed, to reset the protection, it is enough to report the ignition key (Q1) on "OFF" position and start the engine again.

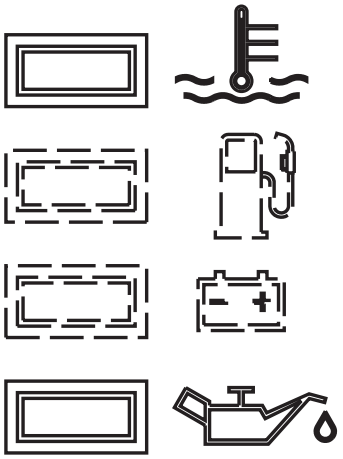

High temperature

Low oil pressure

**NOTE**

*THE ENGINE PROTECTIONS DO NOT WORK WHEN THE OIL IS OF LOW QUALITY BECAUSE NOT CHANGED REGULARLY AT INTERVALS AS PRESCRIBED IN THE OWNER'S ENGINE MANUAL.*

| PROBLEM | POSSIBLE CAUSE | WHAT TO DO |
|---|---|---|
| No welding current but auxiliary output is OK | 1) Defective diode bridge<br>2) Problem with welding current control (PCB) | 1) Check the diodes of the bridge<br>2) Is the remote control switch in the internal position?<br>3) Check the diodes and SCR's of the bridge.<br>4) Check the transformer which supplies power to the welding control PCB. If it is OK replace the PCB |
| Weld poorly | 1) Defective diode bridge<br>2) Problem with welding current control (PCB) | 1) Check the open circuit welding voltage. If it is OK the diode bridge is OK. If it is 1/3 or 2/3 of the nominal value check the diodes or the SCR's.<br>2) If the diode bridge is OK replace the PCB. |
| Intermittently welds poorly | 1) Bad connections to welding current PCB<br>2) Problem with welding current control PCB | 1) Check that the pins of the green connectors are clean and making good contact. Check that shunt connections are tight.<br>2) Replace the welding current control PCB |
| No welding output and no auxiliary power output | 1) Short circuit in wiring<br>2) Defective condenser<br>3) Defective stator<br>4) Short circuited diode bridge | 1) Check the wiring inside the welder for a short circuit between cables or to ground.<br>2) If the wiring is OK, short circuit the condenser to be sure that it is discharged, disconnect all wires from condenser and, using an ohmmeter, check that the condenser is not short circuited.<br>3) If the condenser box is OK, disconnect all leads from the stator except for those going to the condenser box and check the output from the alternator. If there is no output from the welding winding and the auxiliary winding, replace the stator.<br>4) If there is output from all windings reconnect the diode bridge and check if there is welding current. If not the diode bridge is defective. If there is welding current connect the auxiliary power leads one at a time until there is no output; at this point, the short circuit is in that line. |

only for models with electronic control of welding current.

## WARNING

**MOVING PARTS can injure**

- Have **qualified** personnel do maintenance and troubleshooting work.
- Stop the engine before doing any work inside the machine. If for any reason the machine must be operated while working inside, **pay attention** moving parts, hot parts (exhaust manifold and muffler, etc.) electrical parts which may be unprotected when the machine is open.
- Remove guards only when necessary to perform maintenance, and replace them when the maintenance requiring their removal is complete.
- Please wear the appropriate clothing and make use of the PPE (Personal Protective Equipment), according to the type of intervention (protective gloves, insulated gloves, glasses).
- Do not modify the components if not authorized.

- See pag. M1.1 -

**HOT surface can hurt you**

**NOTE**

By maintenance at care of the utilizer we intend all the operatios concerning the verification of mechanical parts, electrical parts and of the fluids subject to use or consumption during the normal operation of the machine.

For what concerns the fluids we must consider as maintenance even the periodical change and or the refills eventually necessary.

Maintenance operations also include machine cleaning operations when carried out on a periodic basis outside of the normal work cycle.

The repairs **cannot be considered** among the maintenance activities, i.e. the replacement of parts subject to occasional damages and the replacement of electric and mechanic components consumed in normal use, by the Assistance Authorized Center as well as by manufacturer.

The replacement of tires (for machines equipped with trolleys) must be considered as repair since it is not delivered as standard equipment any lifting system.

The periodic maintenance should be performed according to the schedule shown in the engine manual. An optional hour counter (M) is available to simplify the determination of the working hours.

## IMPORTANT

In the maintenance operations avoid that polluting substances, liquids, exhausted oils, etc. bring damage to people or things or can cause negative effects to surroindings, health or safety respecting completely the laws and/or dispositions in force in the place.

**ENGINE and ALTERNATOR**

**PLEASE REFER TO THE SPECIFIC MANUALS PROVIDED.**

Every engine and alternator manufacturer has maintenance intervals and specific checks for each model: it is necessary to consult the specific engine or alternator USER AND MAINTENANCE manual.

**VENTILATION**

Make certain there are no obstructions (rags, leaves or other) in the air inlet and outlet openings on the machine, alternator and motor.

**ELECTRICAL PANELS**

Check condition of cables and connections daily.
Clean periodically using a vacuum cleaner, **DO NOT USE COMPRESSED AIR.**

**DECALS AND LABELS**

*All warning and decals should be checked once a year and **replaced** if missing or unreadable.*

**STRENUOUS OPERATING CONDITIONS**

Under extreme operating conditions (frequent stops and starts, dusty environment, cold weather,extended periods of no load operation, fuel with over 0.5% sulphur content) do maintenance more frequently.

**BATTERY WITHOUT MAINTENANCE**
**DO NOT OPEN THE BATTERY**

The battery is charged automatically from the battery charger circuit suppplied with the engine.

Check the state of the battery from the colour of the warning light which is in the upper part.

- Green colour: battery OK
- Black colour: battery to be recharged
- White colour: battery to be replaced

## NOTE

THE ENGINE PROTECTION NOT WORK WHEN THE OIL IS OF LOW QUALITY BECAUSE NOT CHARGED REGULARLY AT INTERVALS AS PRESCRIBED IN THE OWNER'S ENGINE MANUAL.

In case the machine should not be used for more than 30 days, make sure that the room in which it is stored presents a suitable shelter from heat sources, weather changes or anything which can cause rust, corrosion or damages to the machine.

☞ Have **qualified** personnel prepare the machine for storage.

**GASOLINE ENGINE**

Start the engine: It will run until it stops due to the lack of fuel.

Drain the oil from the engine sump and fill it with new oil (see page M25).

Pour about 10 cc of oil into the spark plug hole and screw the spark plug, after having rotated the crankshaft several times.

Rotate the crankshaft slowly until you feel a certain compression, then leave it.

In case the battery, for the electric start, is assembled, disconnect it.

Clean the covers and all the other parts of the machine carefully.

Protect the machine with a plastic hood and store it in o dry place.

**DIESEL ENGINE**

For short periods of time it is advisable, about every 10 days, to make the machine work with load for 15-30 minutes, for a correct distribution of the lubricant, to recharge the battery and to prevent any possible bloking of the injection system.

For long periods of inactivity, turn to the after soles service of the engine manufacturer.

Clean the covers and all the other parts of the machine carefully.

Protect the machine with a plastic hood and store it in a dry place.

In case of necessity for first aid and of fire prevention, see page. M2.5.

**IMPORTANT**

In the storage operations avoid that polluting substances, liquids, exhausted oils, etc. bring damage to people or things or can cause negative effects to surroindings, health or safety respecting completely the laws and/or dispositions in force in the place.

☞ Have **qualified** personnel disassemble the machine and dispose of the parts, including the oil, fuel, etc., in a correct manner when it is to be taken out of service.

As cust off we intend all operations to be made, at utilizer's care, at the end of the use of the machine. This comprises the dismantling of the machine, the subdivision of the several components for a further reutilization or for getting rid of them, the eventual packing and transportation of the eliminated parts up to their delivery to the store, or to the bureau encharged to the cust off or to the storage office, etc.

The several operations concerning the cust off, involve the manipulation of fluids potentially dangerous such as: lubricating oil and battery electrolyte.

The dismantling of metallic parts liable to cause injuries or wounds, must be made wearing heavy gloves and using suitable tools.

The getting rid of the various components of the machine must be made accordingly to rules in force of law a/o local rules.
**Particular attention must be paid when getting rid of:**
**lubricating oils, battery electrolyte, and inflamable liquids such as fuel, cooling liquid.**

The machine user is responsible for the observance of the norms concerning the environment conditions with regard to the elimination of the machine being cust off and of all its components.

In case the machine should be cust off without any previous disassembly it is however compulsory to remove:
- tank fuel
- engine lubricating oil
- cooling liquid from the engine
- battery

**NOTE**: The manufacturer is involved with custing off the machine **only** for the second hand ones, when not reparable.
This, of course, after authorization.

In case of necessity for first aid and fire prevention, see page M2.5.

**IMPORTANT**

In the cust-off operations avoid that polluting substances, liquids, exhausted oils, etc. bring damage to people or things or can cause negative effects to surroindings, health or safety respecting completely the laws and/or dispositions in force in the place.

The information here below are to be intended only as indicative since the above norm is much larger.
For further details please see the specific norms and/or the manufacturers of the product to be used in the welding process.

RUTILE ELECTRODES: E 6013

Easily removable fluid slag, suitable foe welding in all position.
Rutile electrodes weld in d.c. with both polarities (electrode holder at + or -) and in a.c..
Suitable for soft steels R-38/45 kg/mm$^2$ . Also for soft steels of lower quality.

BASIC ELECTRODES: E 7015

Basic electrrodes wels onlu in d.c. with inverse polarity (+ on the electrode holder) ; there are also types for a.c.
Suitable for impure carbon steels. Weld in all position.

HIGH YIELD BASIC ELECTRODES: E 7018

The iron contained in the coating increases the quality of metal added. Good mechanical properties. Weld in all position. Electrode holder at + (inverse polarity). Wld deposit of nice aspect, also vertical. Workable; high yield.
Suitable for steels with high contens of sulphur (impurities).

CELLULOSIC ELECTRODES: E 6010

Cellulosic electrodes weld only in d.c. with polarity + electrode holder - ground clamp.
Special for steels run on pipes with R max 55 kg/mm$^2$. Weld in all position. volatile slag.

## ELECTRODES IDENTIFICATION ACCORDING TO A.W.S. STANDARDS

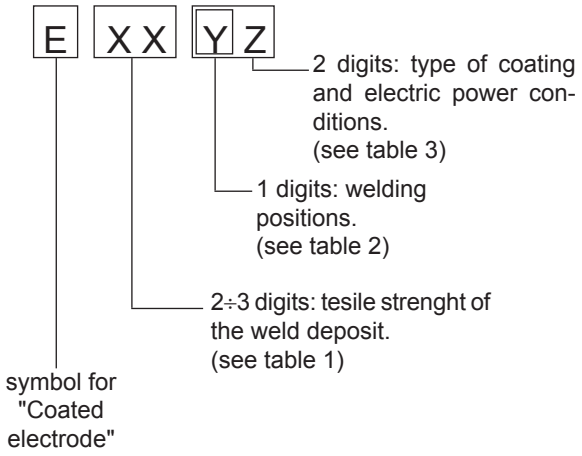


| Number | Strenght | |
|---|---|---|
| | K.s.I. | Kg/mm$^2$ |
| 60 | 60.000 | 42 |
| 70 | 70.000 | 49 |
| 80 | 80.000 | 56 |
| 90 | 90.000 | 63 |
| 100 | 100.000 | 70 |
| 110 | 110.000 | 77 |
| 120 | 120.000 | 84 |

Table 1

| | |
|---|---|
| 1 | for all positions |
| 2 | for plane and verticl |
| 3 | for plane posotion only |

Table 2

| N° | Descrizione |
|---|---|
| 10 | Cellulose electrodes for d.c. |
| 11 | Cellulose electrodes for a.c. |
| 12 | Rutile electrode for d.c. |
| 13 | Rutile electrode for a.c. |
| 14 | High yield rutile electrodes |
| 15 | Basic electrodes for d.c. |
| 16 | Basic electrodes for c.a. |
| 18 | High yield basic electrodes for d.c. (inverse polarity) |
| 20 | Acid electrodes for flat or front position welding for d.c. (- pole) and for a.c. |
| 24 | High yield rutile electrodes for flat or front plane position welding for d.c. and a.c. |
| 27 | High yield acid electrodes for flat or front plane position welding for d.c. (- pole) and a.c.. |
| 28 | High yield basic electrodes for flat or front plane position welding for d.c. (inverse polarity) |
| 30 | Extra high yield acid electrodes, extra high penetration if required, for flat position welding only for d.c. (- pole) and a.c. |

Table 3

(I)
(GB) **ELECTRICAL SYSTEM LEGENDE**
(F)

A : Alternator
B : Wire connection unit
C : Capacitor
D : G.F.I.
E : Welding PCB transformer
F : Fuse
G : 400V 3-phase socket
H : 230V 1phase socket
I : 110V 1-phase socket
L : Socket warning light
M : Hour-counter
N : Voltmeter
P : Welding arc regulator
Q : 230V 3-phase socket
R : Welding control PCB
S : Welding current ammeter
T : Welding current regulator
U : Current transformer
V : Welding voltage voltmeter
Z : Welding sockets
X : Shunt
W : D.C. inductor
Y : Welding diode bridge
A1 : Arc striking resistor
B1 : Arc striking circuit
C1 : 110V D.C./48V D.C. diode bridge
D1 : E.P.1 engine protection
E1 : Engine stop solenoid
F1 : Acceleration solenoid
G1 : Fuel level transmitter
H1 : Oil or water thermostat
I1 : 48V D.C. socket
L1 : Oil pressure switch
M1 : Fuel warning light
N1 : Battery charge warning light
O1 : Oil pressure warning light
P1 : Fuse
Q1 : Starter key
R1 : Starter motor
S1 : Battery
T1 : Battery charge alternator
U1 : Battery charge voltage regulator
V1 : Solenoid valve control PCBT
Z1 : Solenoid valve
W1 : Remote control switch
X1 : Remote control and/or wire feeder socket
Y1 : Remote control plug
A2 : Remote control welding regulator
B2 : E.P.2 engine protection
C2 : Fuel level gauge
D2 : Ammeter
E2 : Frequency meter
F2 : Battery charge trasformer
G2 : Battery charge PCB
H2 : Voltage selector switch
I2 : 48V a.c. socket
L2 : Thermal relay
M2 : Contactor
N2 : G.F.I. and circuit breaker
O2 : 42V EEC socket
P2 : G.F.I. resistor
Q2 : T.E.P. engine protection
R2 : Solenoid control PCBT
S2 : Oil level transmitter
T2 : Engine stop push-button T.C.1
U2 : Engine start push-buttonT.C.1
V2 : 24V c.a. socket
Z2 : Thermal magnetic circuit breaker
W2 : S.C.R. protection unit
X2 : Remote control socket
Y2 : Remote control plug
A3 : Insulation moitoring
B3 : E.A.S. connector
C3 : E.A.S. PCB
D3 : Booster socket
E3 : Open circuit voltage switch
F3 : Stop push-button
G3 : Ignition coil
H3 : Spark plug
I3 : Range switch
L3 : Oil shut-down button
M3 : Battery charge diode
N3 : Relay
O3 : Resistor
P3 : Sparkler reactor
Q3 : Output power unit
R3 : Electric siren
S3 : E.P.4 engine protection
T3 : Engine control PCB
U3 : R.P.M. electronic regulator
V3 : PTO HI control PCB
Z3 : PTO HI 20 l/min push-button
W3 : PTO HI 30 l/min push-button
X3 : PTO HI reset push-button
Y3 : PTO HI 20 l/min indicator
A4 : PTO HI 30 l/min indicator
B4 : PTO HI reset indicator
C4 : PTO HI 20 l/min solenoid valve
D4 : PTO HI 30 l/ min solenoid valve
E4 : Hydraulic oil pressure switch
F4 : Hycraulic oil level gauge
G4 : Preheating glow plugs
H4 : Preheating gearbox
I4 : Preheating indicator
L4 : R.C. filter
M4 : Heater with thermostat
N4 : Choke solenoid
O4 : Step relay
P4 : Circuit breaker
Q4 : Battery charge sockets
R4 : Sensor, cooling liquid temperature
S4 : Sensor, air filter clogging
T4 : Warning light, air filter clogging
U4 : Polarity inverter remote control
V4 : Polarity inverter switch
Z4 : Transformer 230/48V
W4 : Diode bridge, polarity change
X4 : Base current diode bridge
Y4 : PCB control unit, polarity inverter
A5 : Base current switch
B5 : Auxiliary push-button ON/OFF
C5 : Accelerator electronic control
D5 : Actuator
E5 : Pick-up
F5 : Warning light, high temperature
G5 : Commutator auxiliary power
H5 : 24V diode bridge
I5 : Y/▲ commutator
L5 : Emergency stop button
M5 : Engine protection EP5
N5 : Pre-heat push-button
O5 : Accelerator solenoid PCB
P5 : Oil pressure switch
Q5 : Water temperature switch
R5 : Water heater
S5 : Engine connector 24 poles
T5 : Electronic GFI relais
U5 : Release coil, circuit breaker
V5 : Oil pressure indicator
Z5 : Water temperature indicator
W5 : Battery voltmeter
X5 : Contactor, polarity change
Y5 : Commutator/switch, series/parallel
A6 : Commutator/switch
B6 : Key switch, on/off
C6 : QEA control unit
D6 : Connector, PAC
E6 : Frequency rpm regulator
F6 : Arc-Force selector
G6 : Device starting motor
H6 : Fuel electro pump 12V c.c.
I6 : Start Local/Remote selector
L6 : Choke button
M6 : Switch CC/CV
N6 : Connector – wire feeder
O6 : 420V/110V 3-phase transformer
P6 : Switch IDLE/RUN
Q6 : Hz/V/A analogic instrument
R6 : EMC filter
S6 : Wire feeder supply switch
T6 : Wire feeder socket
U6 : DSP chopper PCB
V6 : Power chopper supply PCB
Z6 : Switch and leds PCB
W6 : Hall sensor
X6 : Water heather indicator
Y6 : Battery charge indicator
A7 : Transfer pump selector AUT-0-MAN
B7 : Fuel transfer pump
C7 : "GECO" generating set test
D7 : Flooting with level switches
E7 : Voltmeter regulator
F7 : WELD/AUX switch
G7 : Reactor, 3-phase
H7 : Switch disconnector
I7 : Solenoid stop timer
L7 : "VODIA" connector
M7 : "F" EDC4 connector
N7 : OFF-ON-DIAGN. selector
O7 : DIAGNOSTIC push-button
P7 : DIAGNOSTIC indicator
Q7 : Welding selector mode
R7 : VRD load
S7 : 230V 1-phase plug
T7 : V/Hz analogic instrument
U7 : Engine protection EP6
V7 : G.F.I. relay supply switch
Z7 : Radio remote control receiver
W7 : Radio remote control trasnsmitter
X7 : Isometer test push-button
Y7 : Remote start socket
A8 : Transfer fuel pump control
B8 : Ammeter selector switch
C8 : 400V/230V/115V commutator
D8 : 50/60 Hz switch
E8 : Cold start advance with temp. switch
F8 : START/STOP switch
G8 : Polarity inverter two way switch
H8 : Engine protection EP7
I8 : AUTOIDLE switch
L8 : AUTOIDLE PCB
M8 : A4E2 ECM engine PCB
N8 : Remote emergency stop connector
O8 : V/A digital instruments and led VRD PCB
P8 : Water in fuel
Q8 : Battery disconnect switch
R8 : Inverter
S8 : Overload led
T8 : Main IT/TN selector
U8 : NATO socket 12V
V8 : Diesel pressure switch
Z8 : Remote control PCB
W8 : Pressure turbo protection
X8 : Water in fuel sender
Y8 : EDC7-UC31 engine PCB
A9 : Low water level sender
B9 : Interface card
C9 : Limit switch
D9 : Starter timing card
E9 : Luquid pouring level float
F9 : Under voltage coil
G9 : Low water level warning light
H9 : Chopper driver PCB
I9 : Fuel filter heater
L9 : Air heater
M9 : ON/OFF switch lamp
N9 : UP/DOWN button mast
O9 : Hydraulic unit solenoid valve
P9 : Hydraulic unit engine
Q9 : Ignitor
R9 : Lamp
S9 : Power system
T9 :
U9 :
V9 :
Z9 :
W9 :
X9 :
Y9 :

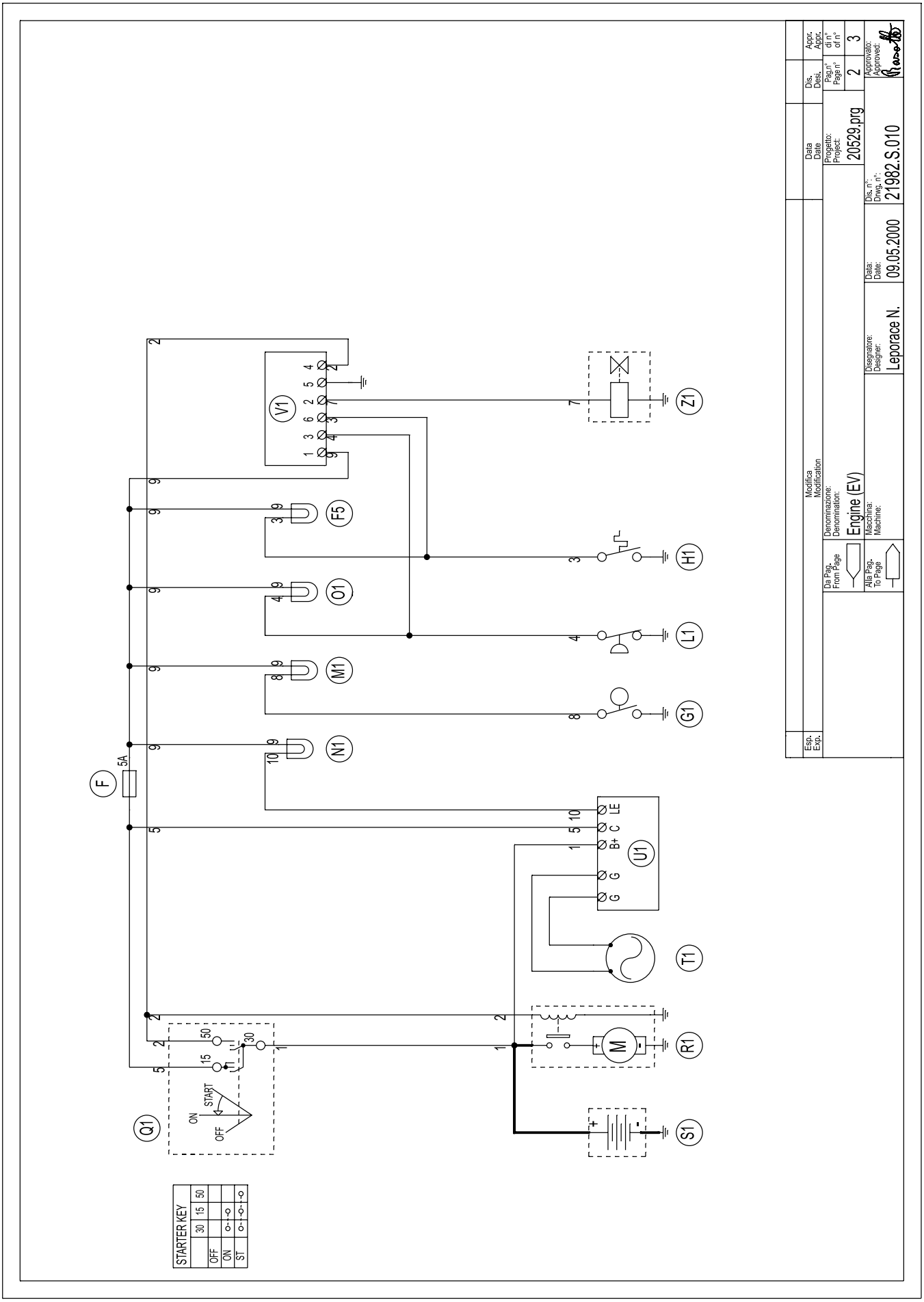
Engine (EV)
20529.prg
21982.S.010
Leporace N.
09.05.2000
STARTER KEY
OFF
ON
ST
30
15
50
START
ON
OFF
Q1
F
5A
V1
F5
O1
M1
N1
Z1
H1
L1
G1
U1
T1
R1
S1
M
B+
C
LE
G
G

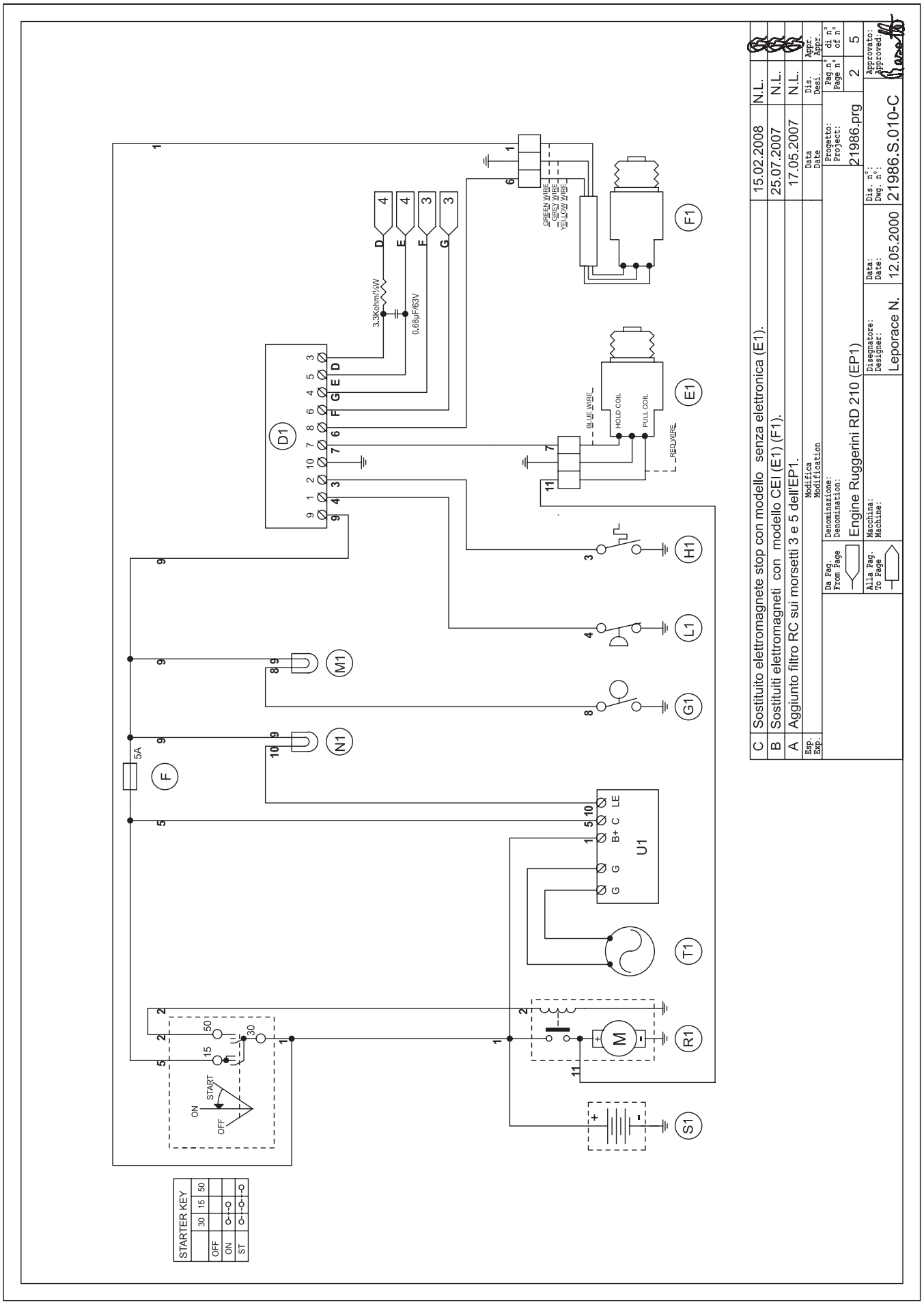
D1
3.3Kohm/1/4W
0.68µF/63V
GREEN WIRE
GREY WIRE
YELLOW WIRE
F1
BLUE WIRE
HOLD COIL
PULL COIL
RED WIRE
E1
H1
L1
G1
M1
N1
5A
F
U1
T1
R1
S1
M
STARTER KEY
OFF
ON
ST
C Sostituito elettromagnete stop con modello senza elettronica (E1). 15.02.2008 N.L.
B Sostituiti elettromagneti con modello CEI (E1) (F1). 25.07.2007 N.L.
A Aggiunto filtro RC sui morsetti 3 e 5 dell'EP1. 17.05.2007 N.L.
Engine Ruggerini RD 210 (EP1)
Leporace N.
12.05.2000
21986.prg
21986.S.010-C
14/04/14 37304-I

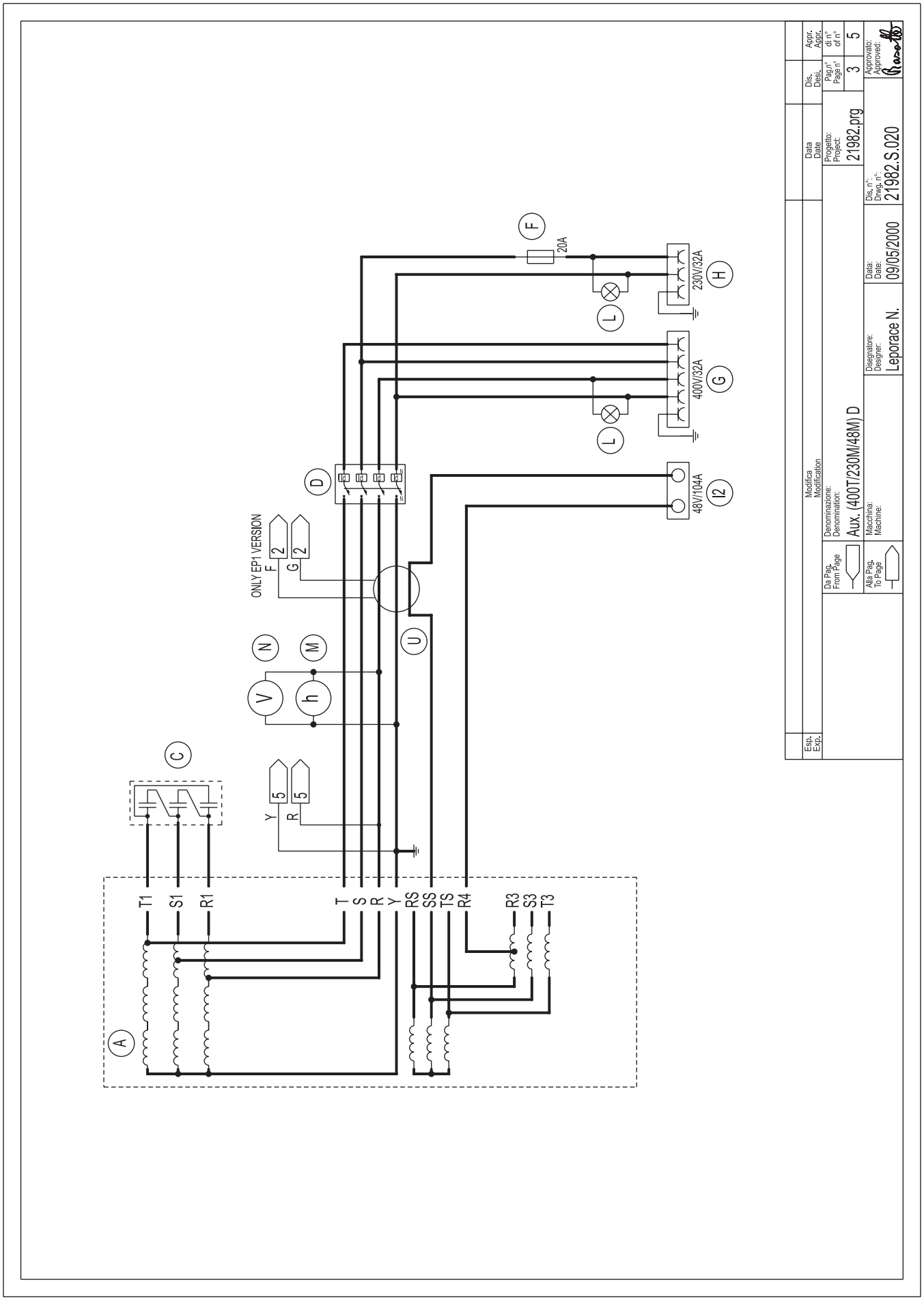
A
C
D
F
20A
H
230V/32A
L
G
400V/32A
I2
48V/104A
U
N
M
V
h
ONLY EP1 VERSION
F
G
2
2
Y
R
5
5
T1
S1
R1
T
S
R
Y
RS
SS
TS
R4
R3
S3
T3
Modifica
Modification
Esp.
Exp.
Data
Date
Dis.
Desi.
Appr.
Appr.
Da Pag.
From Page
Alla Pag.
To Page
Denominazione:
Denomination:
Aux. (400T/230M/48M) D
Macchina:
Machine:
Progetto:
Project:
21982.prg
Pag.n°
Page n°
3
di n°
of n°
5
Disegnatore:
Designer:
Leporace N.
Data:
Date:
09/05/2000
Dis. n°:
Dwg. n°:
21982.S.020
Approvato:
Approved:

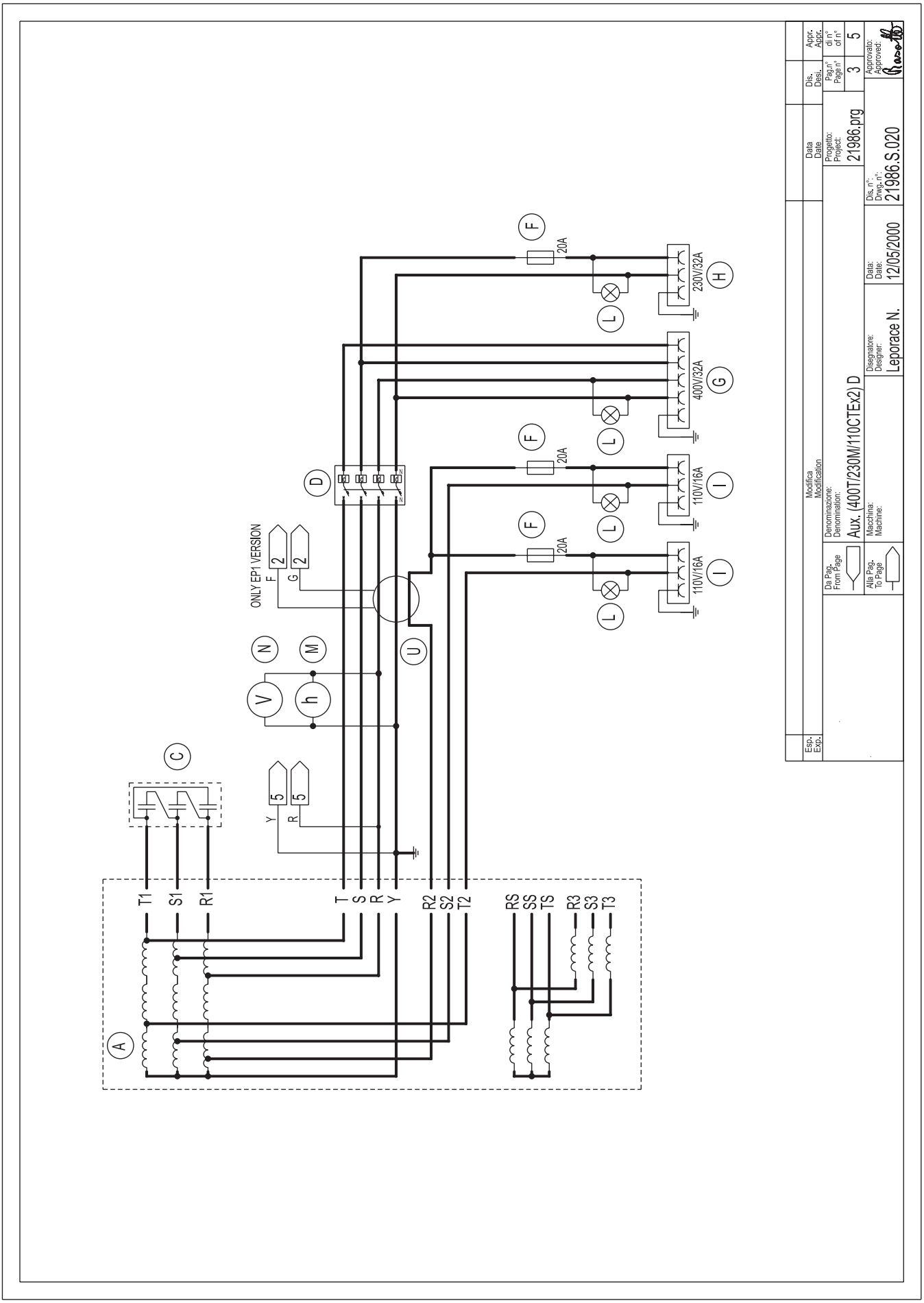
A
C
D
F
20A
H
230V/32A
G
400V/32A
I
110V/16A
L
N
M
V
h
U
ONLY EP1 VERSION
F
G
2
5
Y
R
T1
S1
R1
T
S
R
Y
R2
S2
T2
RS
SS
TS
R3
S3
T3
Aux. (400T/230M/110CTEx2) D
Leporace N.
12/05/2000
21986.S.020
21986.prg
3
5

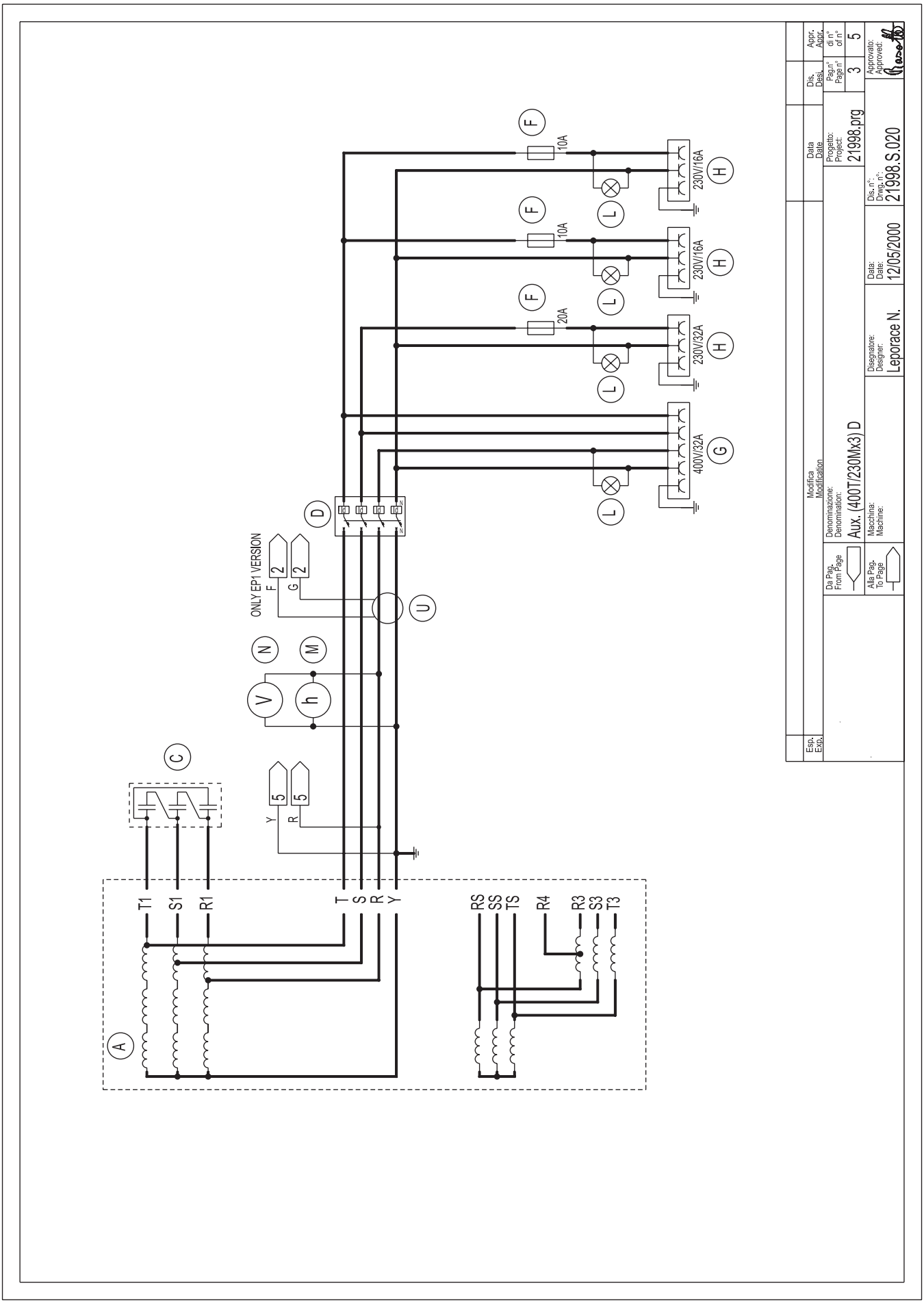
A
C
D
F
10A
20A
L
H
G
U
N
M
V
h
230V/16A
230V/32A
400V/32A
ONLY EP1 VERSION
T1
S1
R1
T
S
R
Y
RS
SS
TS
R4
R3
S3
T3
Modifica
Modification
Denominazione:
Denomination:
Aux. (400T/230Mx3) D
Macchina:
Machine:
Disegnatore:
Designer:
Leporace N.
Data:
Date:
12/05/2000
Dis. n°:
Dwg. n°:
21998.S.020
Progetto:
Project:
21998.prg
Pag.n°
Page n°
3
di n°
of n°
5
Approvato:
Approved:
Da Pag.
From Page
Alla Pag.
To Page
Esp.
Exp.
Data
Date
Dis.
Desi.
Appr.
Appr.

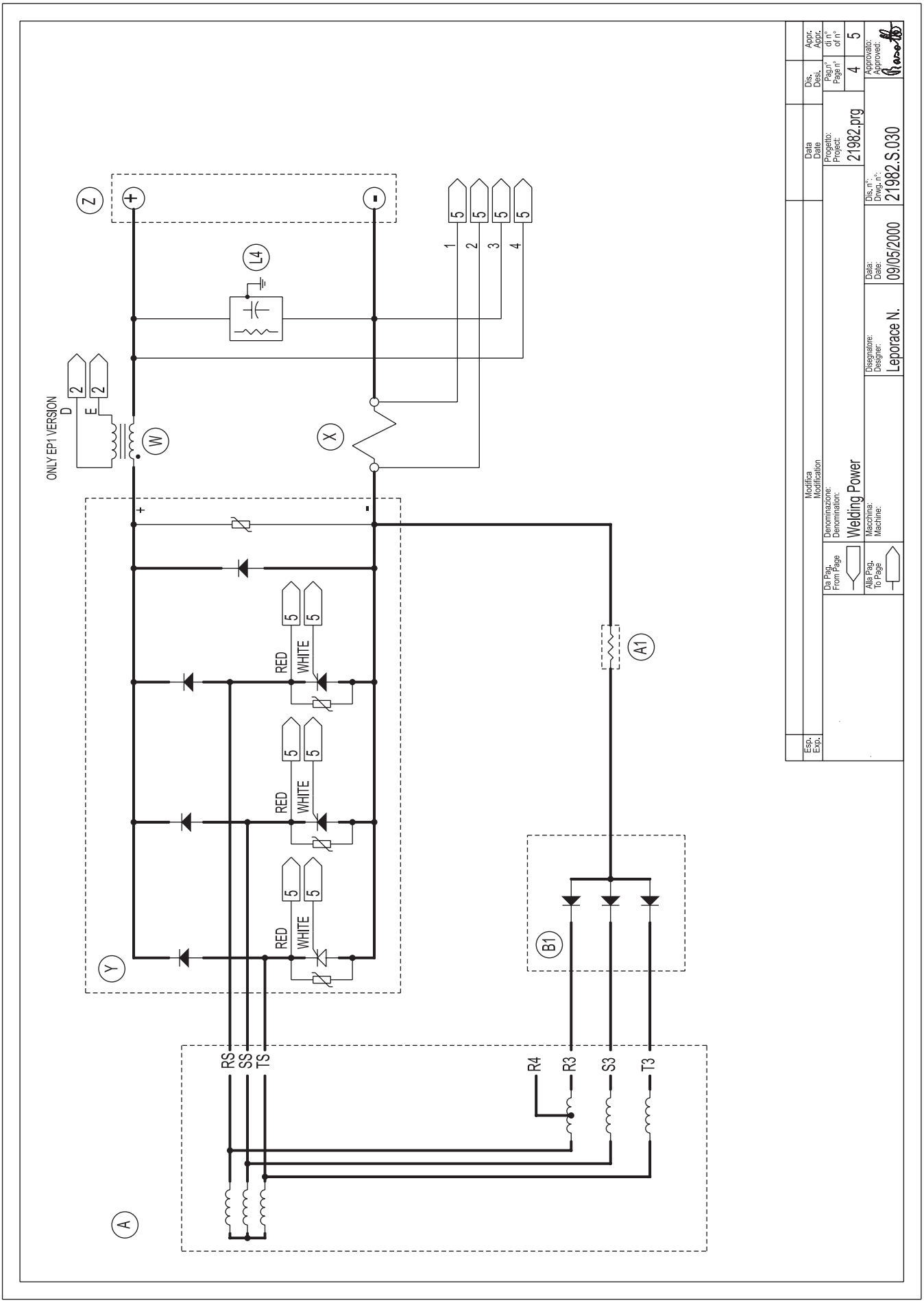
Z
L4
ONLY EP1 VERSION
D
E
W
X
Y
A
A1
B1
RED
WHITE
RS
SS
TS
R4
R3
S3
T3
Modifica
Modification
Esp.
Exp.
Data
Date
Dis.
Desi.
Appr.
Appr.
Da Pag.
From Page
Alla Pag.
To Page
Denominazione:
Denomination:
Welding Power
Macchina:
Machine:
Progetto:
Project:
21982.prg
Pag.n°
Page n°
4
di n°
of n°
5
Disegnatore:
Designer:
Leporace N.
Data:
Date:
09/05/2000
Dis. n°:
Dwg. n°:
21982.S.030
Approvato:
Approved:

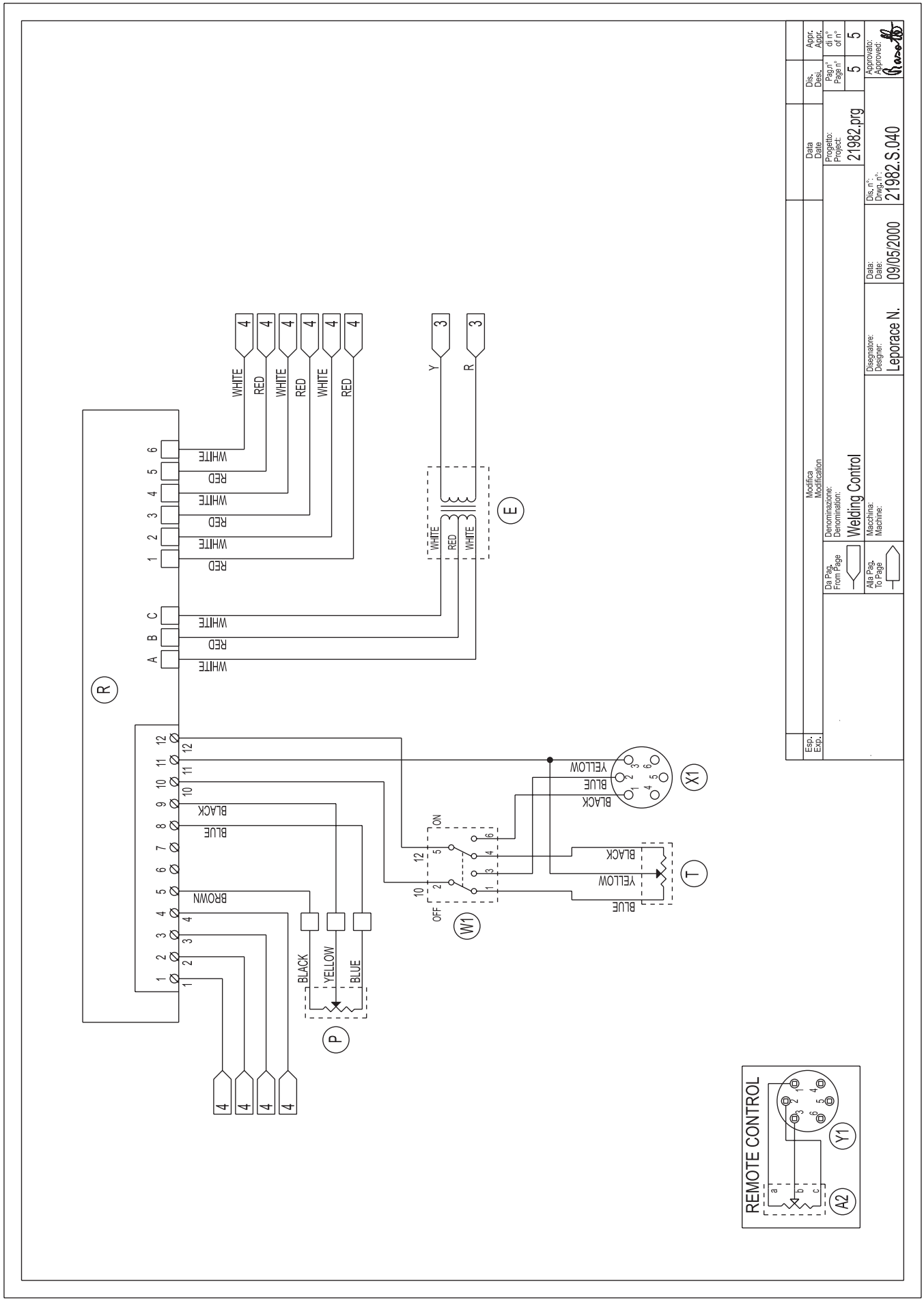
R
A B C
1 2 3 4 5 6
WHITE
RED
E
Y
R
3
4
P
BLACK
YELLOW
BLUE
BROWN
W1
ON
OFF
T
X1
REMOTE CONTROL
A2
Y1
Esp.
Exp.
Modifica
Modification
Data
Date
Dis.
Des.
Appr.
Appr.
Denominazione:
Denomination:
Welding Control
Progetto:
Project:
21982.prg
Pag.n°
Page n°
5
di n°
of n°
5
Da Pag.
From Page
Alla Pag.
To Page
Macchina:
Machine:
Disegnatore:
Designer:
Leporace N.
Data:
Date:
09/05/2000
Dis. n°:
Drwg. n°:
21982.S.040
Approvato:
Approved:

WWW.MOSA.IT
MOSA div. della BCS S.p.A.
Stabilimento di Viale Europa, 59
20090 Cusago (MI) Italia

Tel. + 39 - 0290352.1
Fax + 39 - 0290390466